A Wireless Gas Monitor
with IEEE 1451 Protocol

Darold Wobschall

Esensors Inc, Buffalo NY

www.eesensors.com

SAS 2006 – IEEE Sensors Applications Symposium
Houston, Texas USA, February 2006

Goals

- To develop a gas monitor which can be used with all common gas sensor technologies
- Permit interchangeable gas sensor heads with automatic configuration
- Have both wired (Internet/Ethernet) and Wireless (point/point and Mesh) communication
- Read out in standard format and engineering units.

Monitor Placement in Buildings

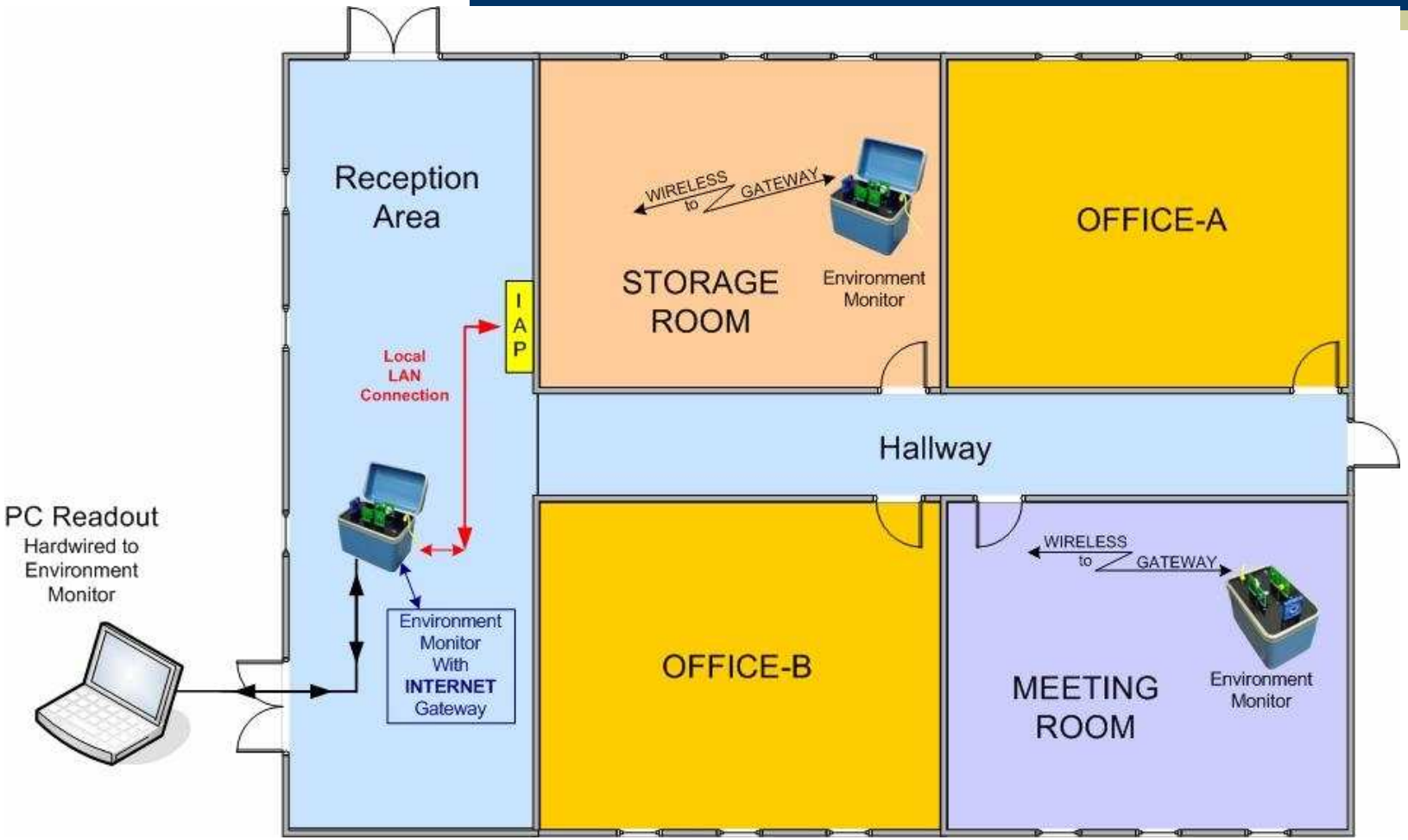

List of Gas Sensor Technologies

- Semiconductor – resistive*
- Semiconductor – voltage*
- Amperometric*
- Catalytic*
- Infrared*
- Photo-ionization
- Fluorescent
- Surface acoustic wave (SAW) & vibrating beam
- Capacitive* and other

* Tested

Block Diagram of Plug-in Sensor Module

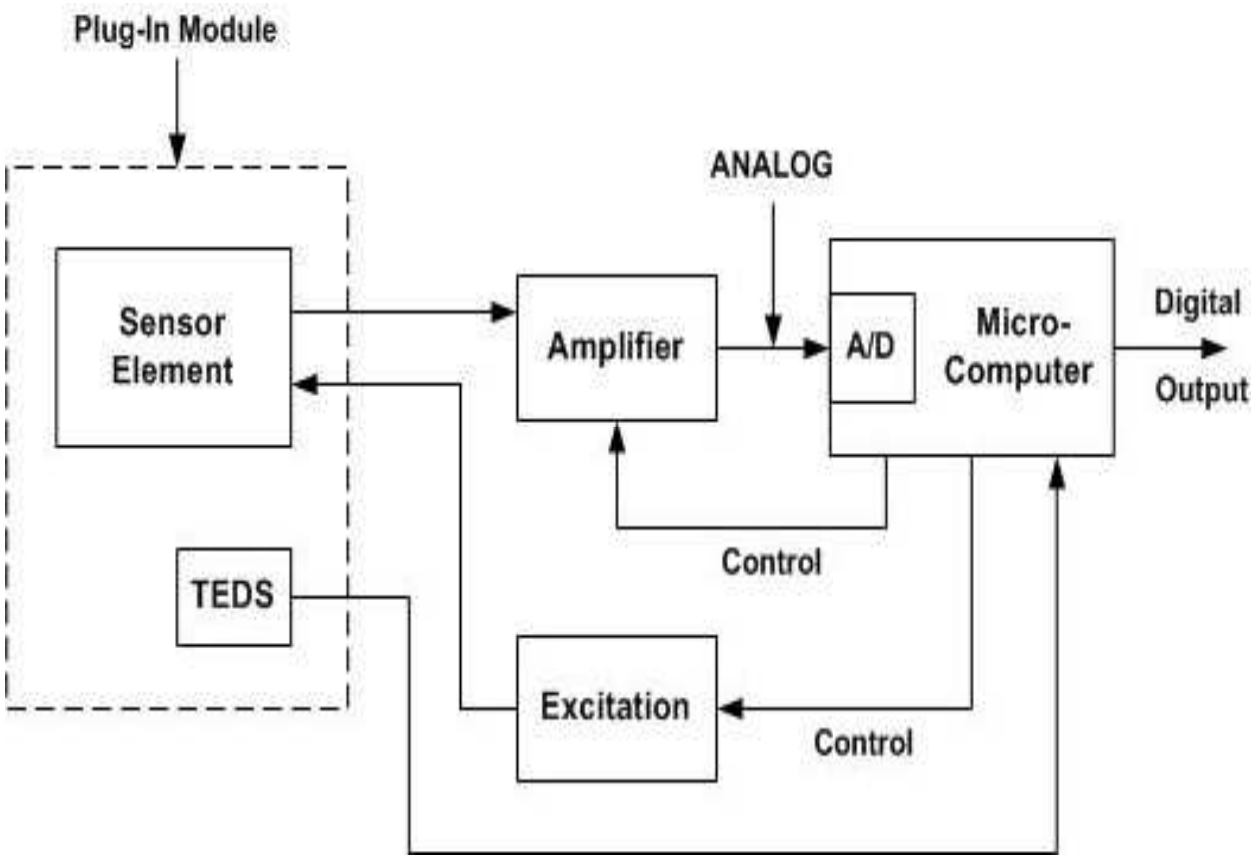

Signal Conditioner Circuit
(configured for a metal oxide sensor)

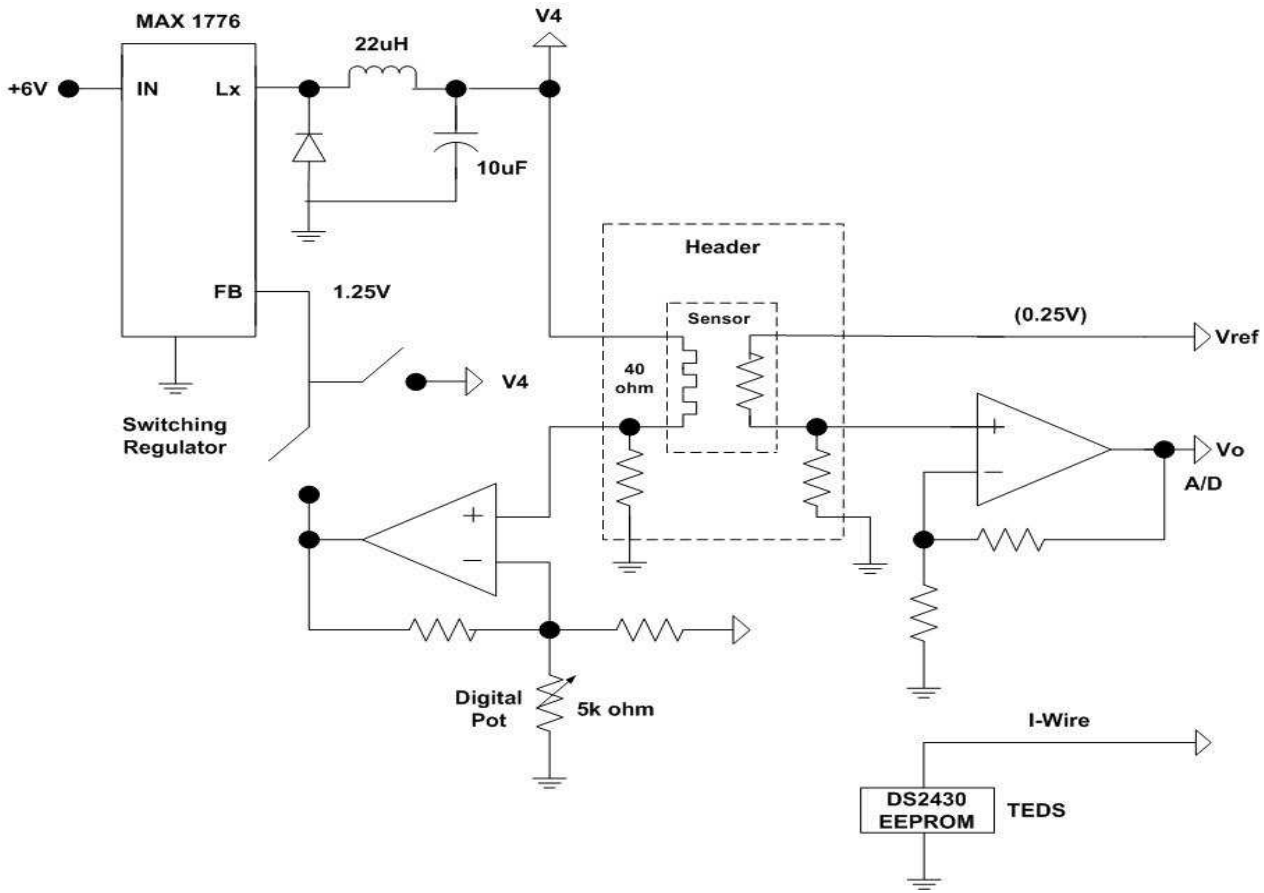

IEEE 1451 Smart Transducer Concept

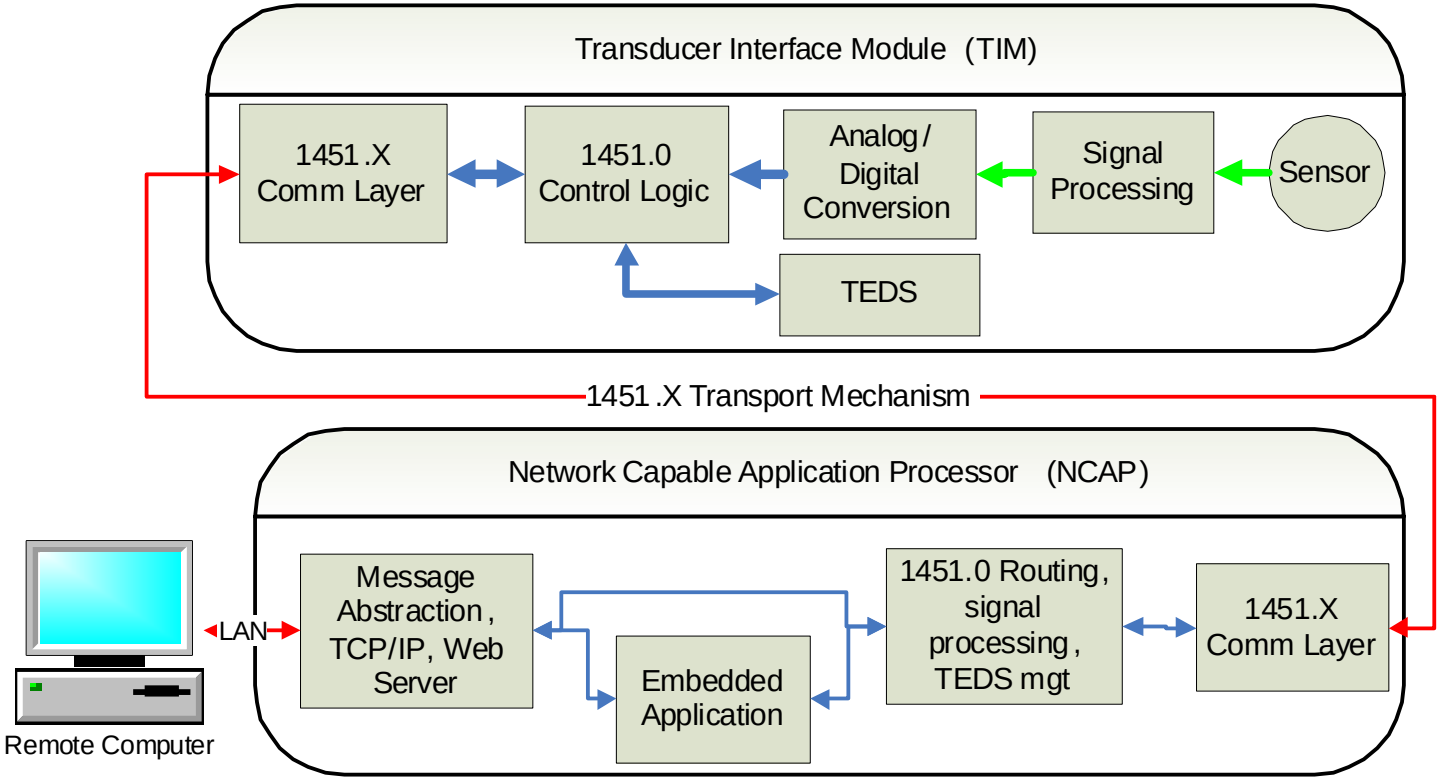

IEEE 1451.4 Interface
(featuring the TEDS)

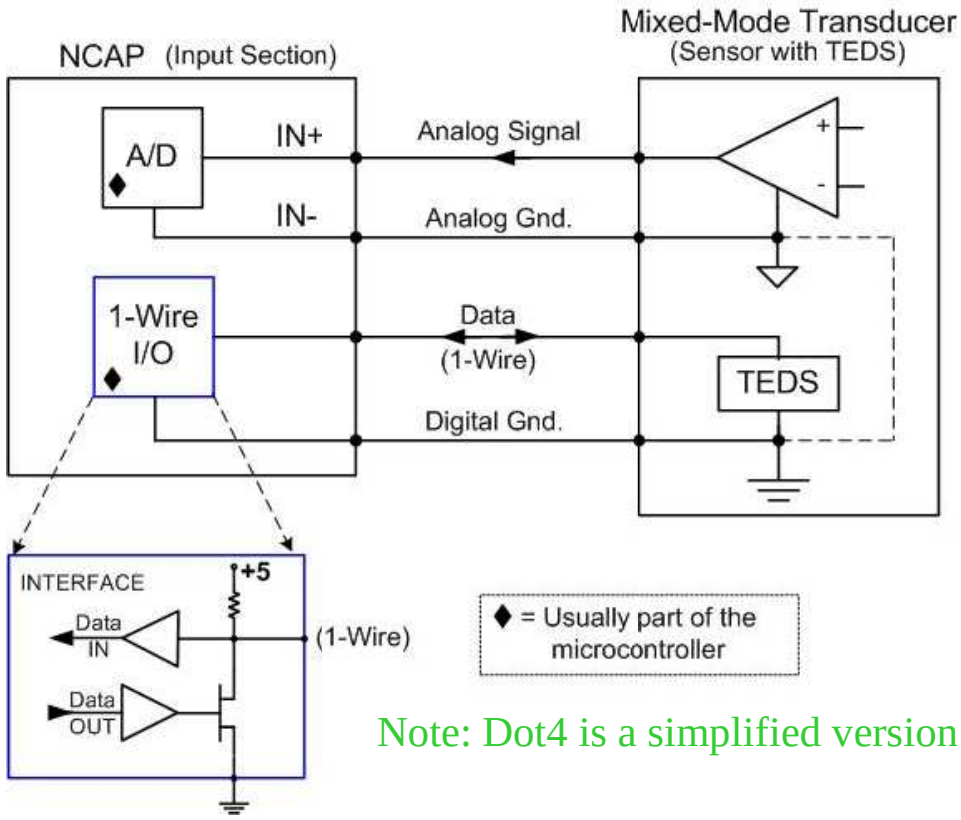

Note: Dot4 is a simplified version of IEEE 1451

Transducer Electronic Data Sheet (Dot 4 TEDS)

- UUID (Universal **Unique** Identifier)

  Supplied by EEPROM (DS2433) manufacturer (6 bytes)
- Basic TEDS (8 bytes)
  - Model Number (15 bits)
  - Version Letter (5 bits, A-Z)
  - Version Number (6 bits)
  - Manufacturer ID (14 bits)
  - Serial Number (6 bits)
- Manufacturer's TEDS

  Sensor type and calibration parameters (16 bytes)

Monitor Block Diagram

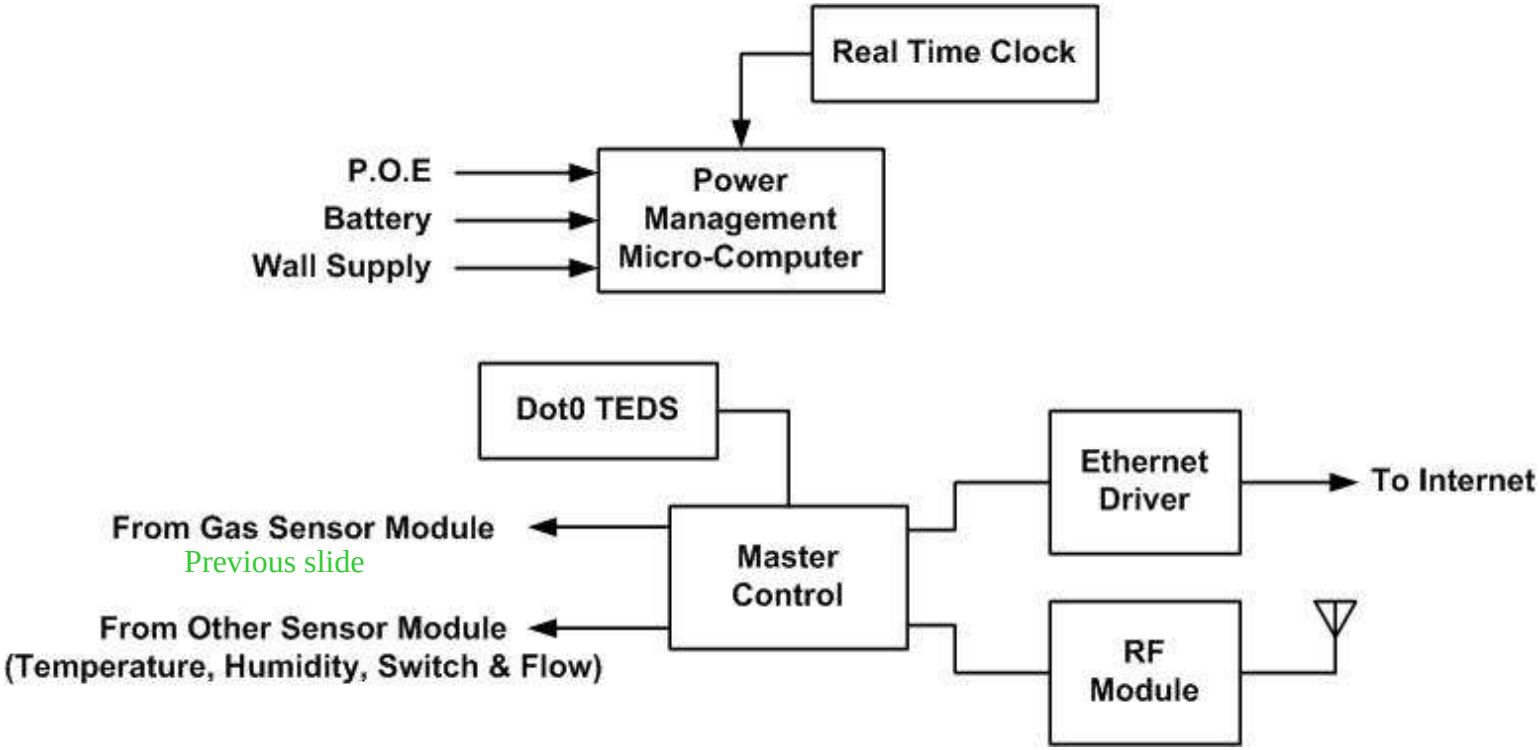

Photo of Monitor

with Four plug-in sensors

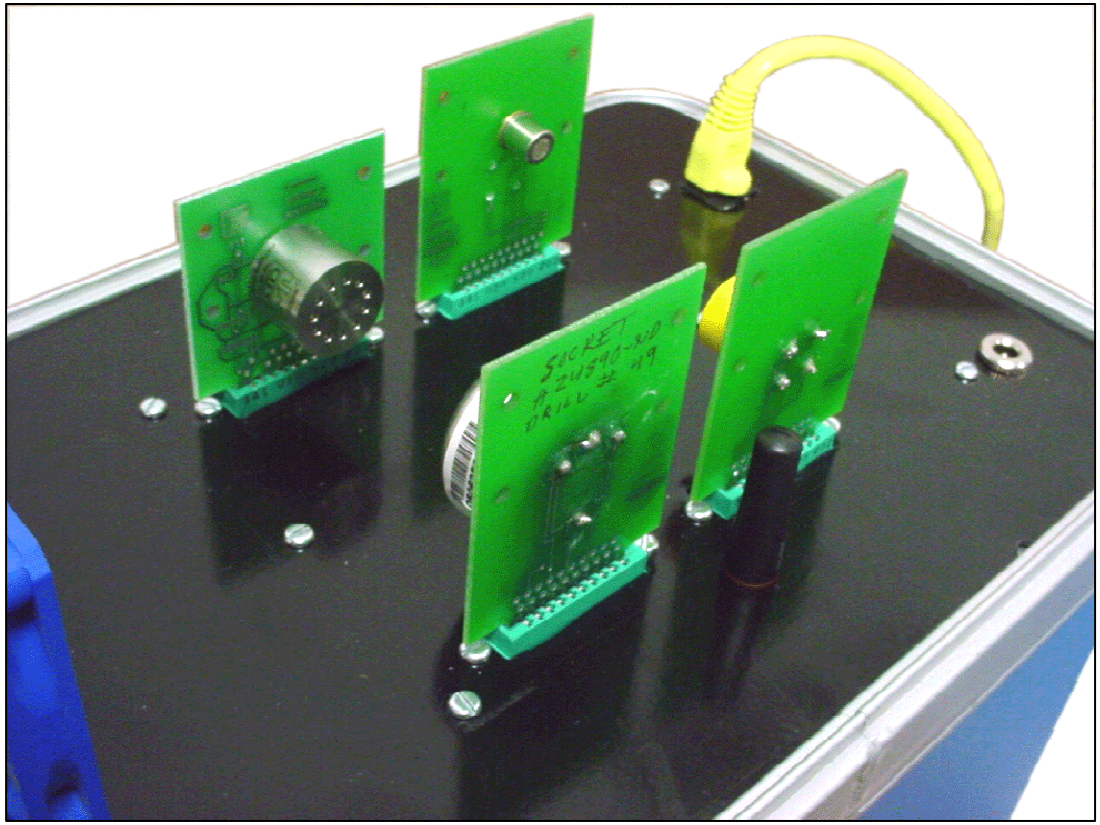

Metal Oxide Sensor for Volatile Organic Compounds

- Based on Tin Oxide (SnO_2) or similar metal oxide semiconductors
- Surface reaction with ambient gases when hot (350-500 ^oC)
- Heater (e.g. 4 v @ 100 mA) heats substrate
- Adsorbed gas reduces grain-boundary potential barrier and thus increases conductivity (decreases resistance)
- Delta-R is a function (approx. log or square root) of gas conc. (ppm)

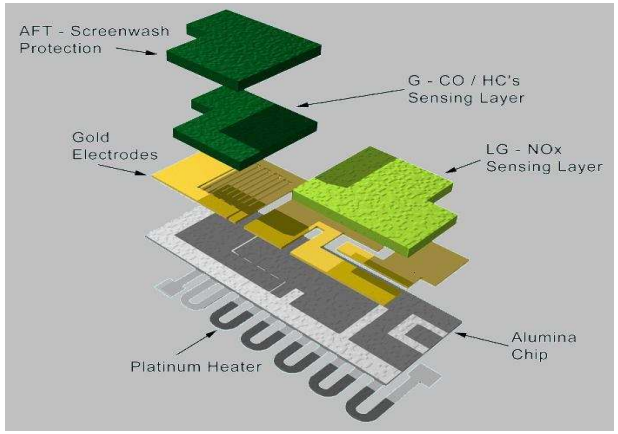

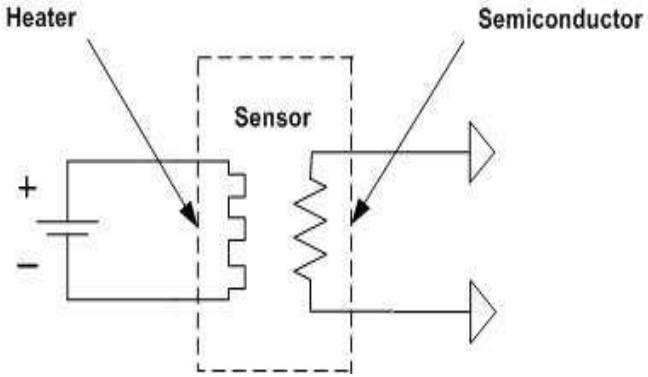

Response of a VOC sensor to Acetone Vapor

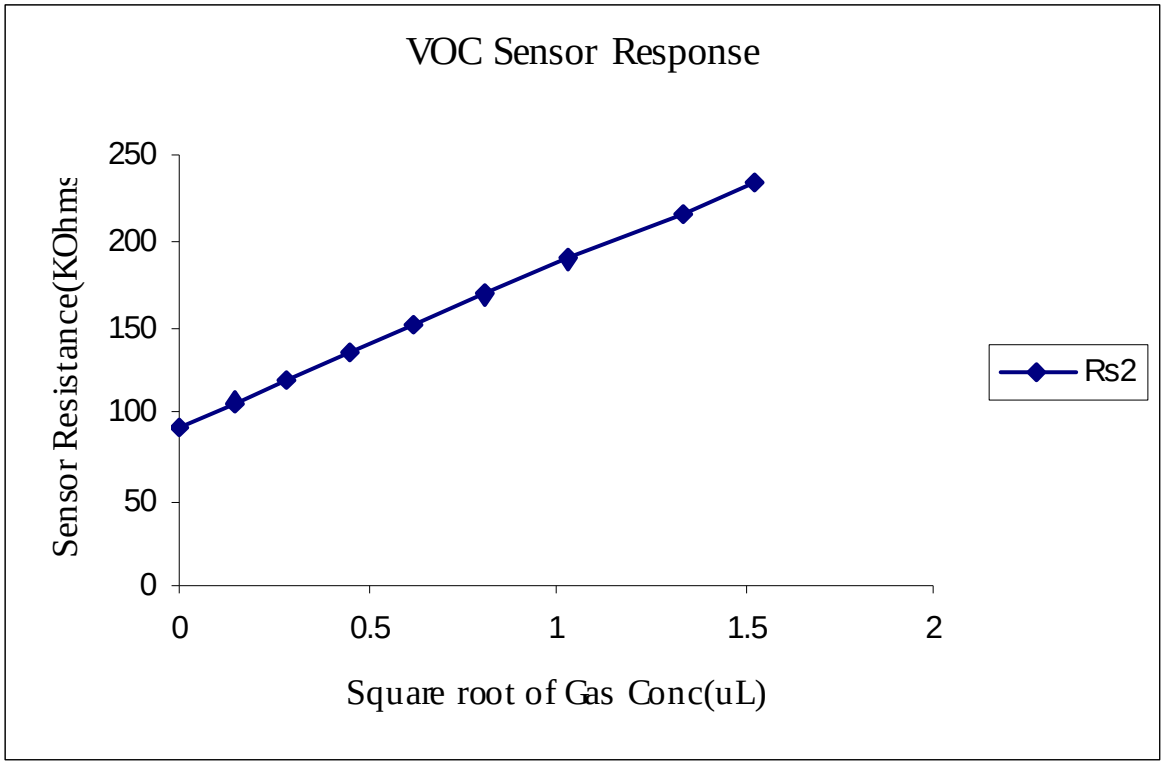

Measured at analog test point

Infrared Absorption Sensor Technology

- Some gases absorb light at particular IR wavelengths
- $I/Io = e^{-Ax}$, where I/Io is light absorbed during transmission,
  x is path length and A is absorption coef. at specific wavelength
- Transmission filters select specific wavelength bands
- A is proportional to gas concentration
- IR sensors reproducible but not sensitive (need high conc or long paths)

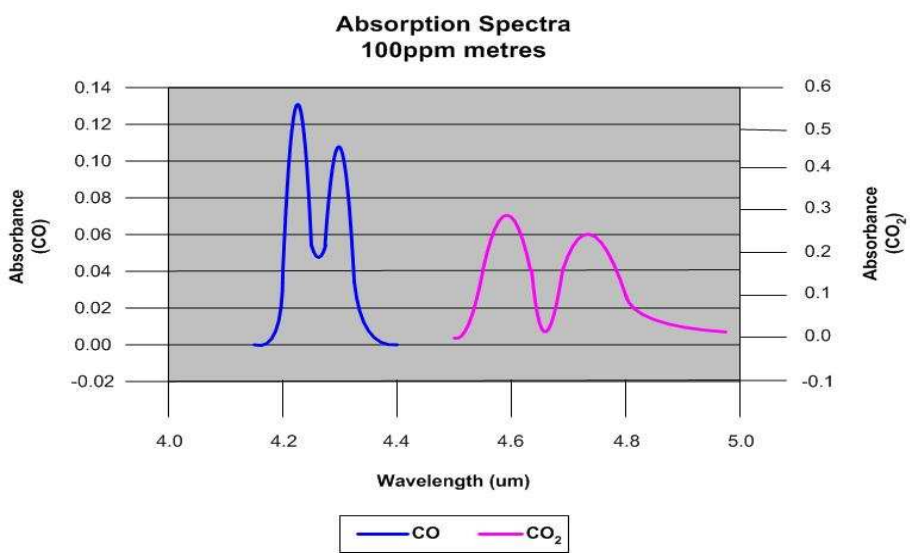

Response of a IR sensor to Carbon Dioxide Gas

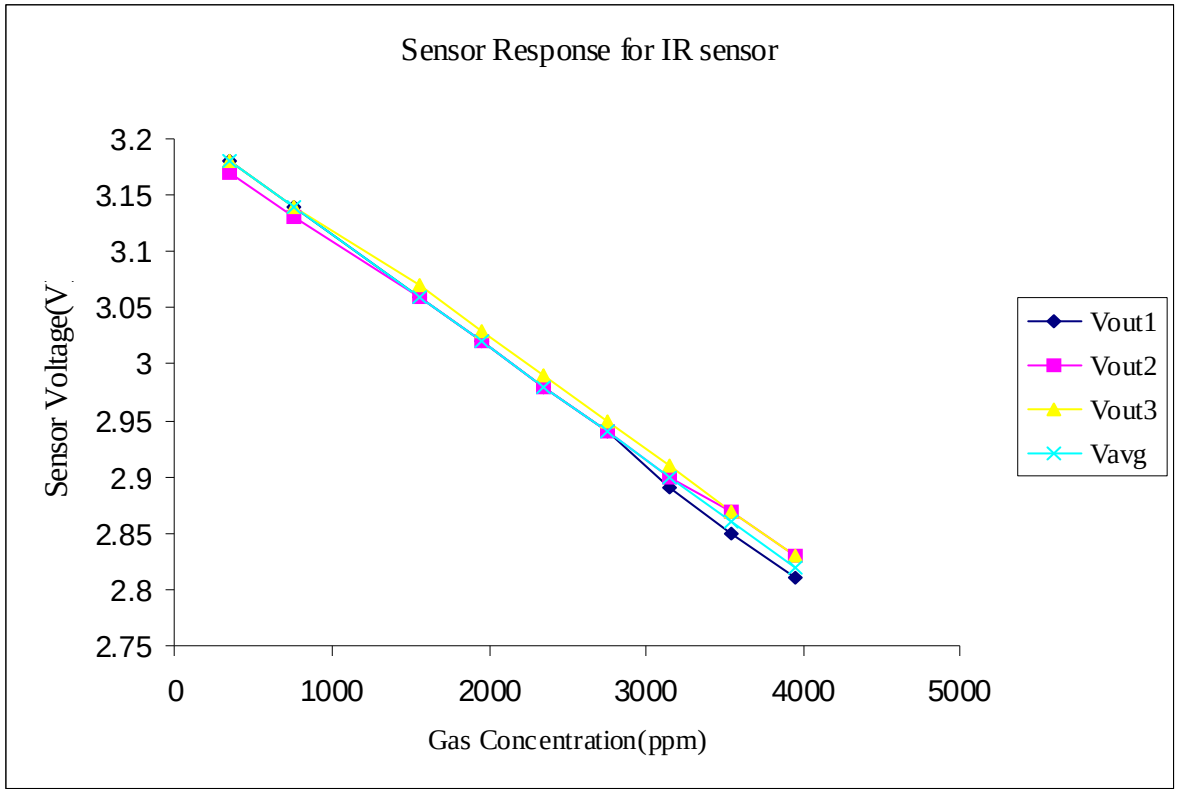

Display of Gas Concentration in Engineering Units

WebSensor V2 Management Tool

Logout

Home
Sensor's Readings
TCP/IP Settings
SMTP Settings
SNMP Settings
Timer Settings
Firmware Upgrade
Wireless
Security

Sensor's Readings

Help

This page contains sensor's data reading from POD. You can look up the sensor type table to map the correct sensors that POD connected to.

Chan#	Type	Current Data	Unit	W/N/C
1	VOC	54	PPM	Normal
2	CO2	804	PPM	Normal
3	H2	122	PPM	Normal
4	CO2	805	PPM	Normal

List of Gases

- Carbon dioxide
- VOC (Volatile Organic Compounds)
- Oxygen
- Combustible gases
- Carbon monoxide
- Hydrogen sulfide
- Sulfur dioxide
- Chlorine
- Hydrogen cyanide
- NOx
- Hydrogen chloride
- Hydrogen
- Humidity /Temperature
- Smoke

Monitor RF Transceiver
(Point-to-point version)

- Based on Chipcon CC1000 transceiver IC
- Transmitter/receiver bands programmable
- Data send in bursts (433 MHz)
- FM Manchester encoding
- All transmissions have address/ID information
- Sync and CRC characters added
- Range of 30-100 meters
- Received messages retransmitted (repeated) along with local data

Gateway Specifications

- Gateway is any monitor connected to Internet (via Ethernet) – it has dual function.
- All wireless messages are retransmitted to Internet without sorting or checking for duplication.
- Local readout is PC (laptop) connected via Ethernet to Gateway/monitor.

RF Transceiver
(Zigbee option)

- 2.4 GHz, spread spectrum
- Mesh network protocol
- Data transfer from node (monitor) to node
- Timed transmission option
- IEEE 1451.5 profile not yet available
- Simplified version tested

IEE 1451.0 (Dot 0) Format

- TEDS [Memory block with defined format]
  - MetaTEDS
  - Meta-ID TEDS
  - Channel TEDS
  - Channel-ID TEDS
  - Calibration TEDS
  - Xdr-name TEDS
  - Phy TEDS
- Data Transmission [specific octet format]
  - TEDS/Status requests
  - Triggering and configuration
  - Sensor read commands and data return
  - Actuator write commands and data sending

Dot 4 to Dot 0 Format Conversion

- Monitor is TIM, except gateway function is NCAP
- No standard method of Dot 0 to Dot 4 conversion
- UUID (10 bytes) least significant bits are Dot4 UUID (6 bytes, chan 1)
- Dot 0 channel # is (gas) sensor number
- No calibration TEDS (this model) since linearization and calibration done in TIM and not NCAP
- Dot 4 basic TEDS transferred to Dot 0 Channel-ID TEDS

References

- "Electronic Noses: Principles and Applications", J. Gardner and P. Bartlett, Oxford University Press (March 1, 1999)
- Chemical sensor review: www.sandia.gov/sensor/SAND2001-0643.pd
- IEEE-P1451 "A Smart Transducer Interface Standard for Sensors and Actuators" <http://www.ic.ornl.gov/p1451/p1451.html>
- D. Wobschall, "A Minimal Dot4 NCAP with a Compatible Sensor Bus," Sicon/05 (Houston, Jan 2005).
- Darold Wobschall, "An IEEE 1451 NCAP Prototype with Multiple Serial Ports and Internet Access," Proc. Sensors Expo (June 2003) and "Smart Signal Conditioner Technology for Networked Gas Sensors," Sensor Gov (Virginia Beach, Sept 2004)

Acknowledgements

- Supported by Dept. of Homeland Security (W91CRB-04-C-4184)
- Contributions to the development of this monitor by:
  - Ronald Peterson
  - Wai Sing Poh
  - Ming Zeng
  - Edward Conley
  - Thomas Cordier

Summary

- We have developed a gas monitor with inter-changeable sensor heads which can be used with a variety of sensor technologies.
- The use of Dot 4 TEDS for automatic configuration of the sensor heads was described.
- Both wired (Ethernet/Internet) and wireless (point-to-point) and Zigbee were demonstrated.
- Typical sensor responses were presented.
- The IEEE 1451.0 standard transducer protocol (including TEDS) was described, including conversion from the Dot 4 standard.

Further information:designer@eesensors.com