An IEEE 21451.2/.4 Compatible Sensor and Gateway

Darold Wobschall*, Yuan Ma and Avarachan Cherian

Esensors Inc.

designer@eesensors.com

SAS 2017

*Chair of IEEE 21451.2 Working Group

Topics

- Review and History of IEEE 21451 standards
- Dot2 NCAP and TIM Description
- Modifications of Dot2 TIM to accommodate Dot4
- Suggestions for future developments

History and Nomenclature

- Original (pre-2015): IEEE 1451.1, -.2, -.3,- .4
  - Named: Dot1, etc
- Basic format split out at IEEE 1451.0 (Dot0) in 2015
  - Dot5 and revised Dot2 based on new Dot0
- Renamed as: ISO/IEC/IEEE 21451 (2010)
  - Because ISO/IEC accepted IEEE 1451 standard
  - But required name changes to conform
  - IEEE 1451.0 now ISO/IEC/IEEE 21450 (still Dot0)
  - IEEE 1451.x now ISO/IEC/IEEE 21451-x (still Dotx)

Status of Various Parts of IEEE 1451

(now ISO/IEC/IEEE 21451)

Parts not developed in order

- **1451.0 – Basic commands/TEDS format Done (2007)**
- 1451.1 – Common Network Interface/ NCAP Being Revised (1999)
- 1451.2 – Serial Revised (2013) *
- 1451.4 – TEDS Only Done (2005)
- 1451.5 – Wireless (WiFi, Zigbee, etc) Done (2007)
- 1451.7 – RFID Done (2010)

* Original Dot 2 in 1997 –being reballoted as ISO standard

<u>Also underway</u>

- P21451.001-Guideline for transducer signal processing
- P21451.1.4 – XMPP network
- P1451-99 - Harmonization

IEEE 21451 Smart Transducer Standard Block Diagram

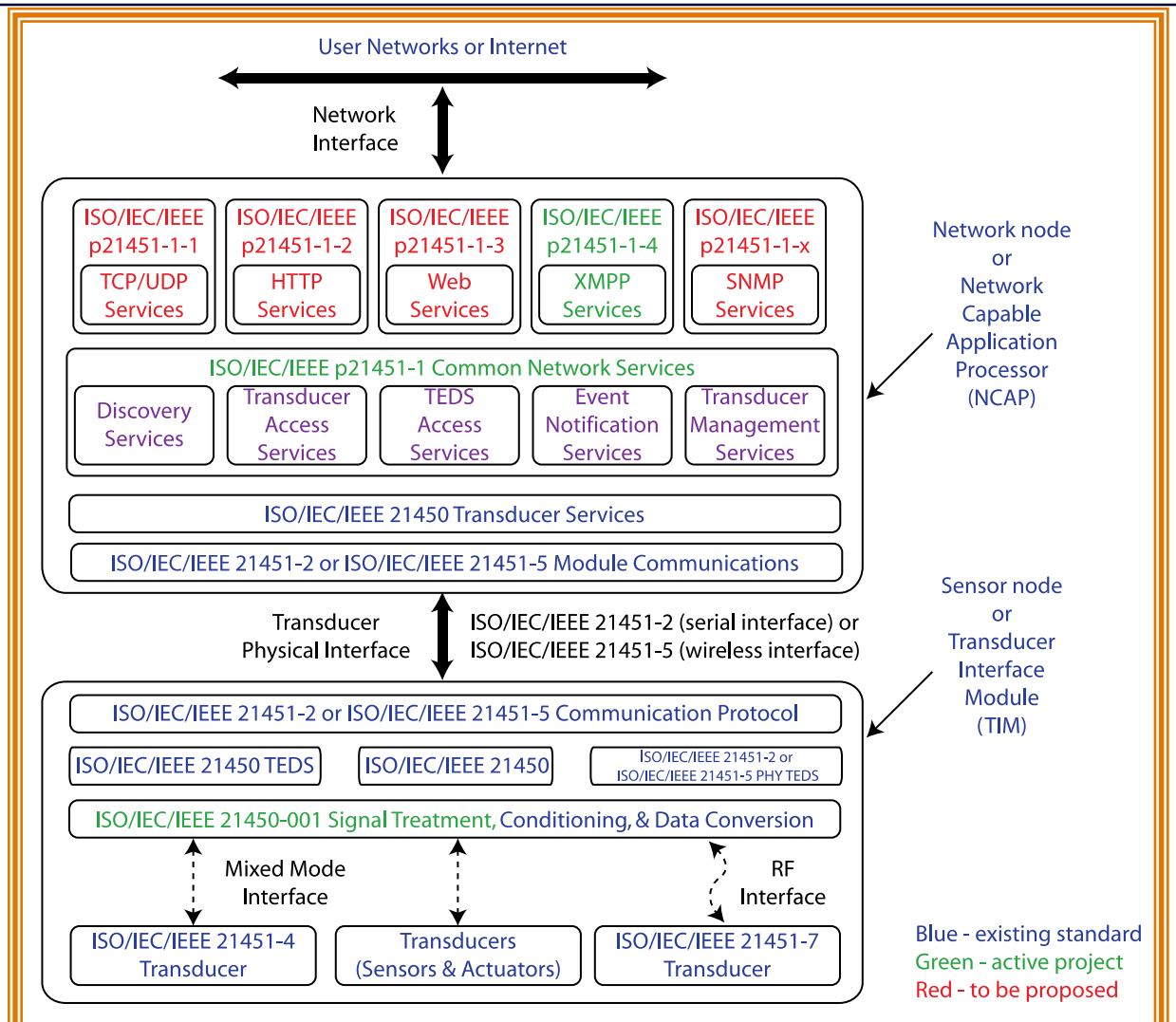

IEEE 21451.2 Serial Standard for point-to-point buses

Dot 2 Detail 1 of 5

- Based on IEEE 1451.0 (Dot 0) standard
  - now ISO?IEC/IEEE 21450)
  - Dot 0 provides common command and data formats for transducer access
  - Dot 2 provides the PHY part of the standard
- Includes UART & RS232, SPI and I2C
  - Provides specific TEDS and data headers
- Original Dot 2 Enhanced SPI (TII) interface not included
- Annex describes extension to USB modules (not multi-drop)
- Connectors and pinouts specified
- Standard document is simplified because it relies on Dot 0

Dot 2 Detail 2 of5

Dot 2 Block Diagram

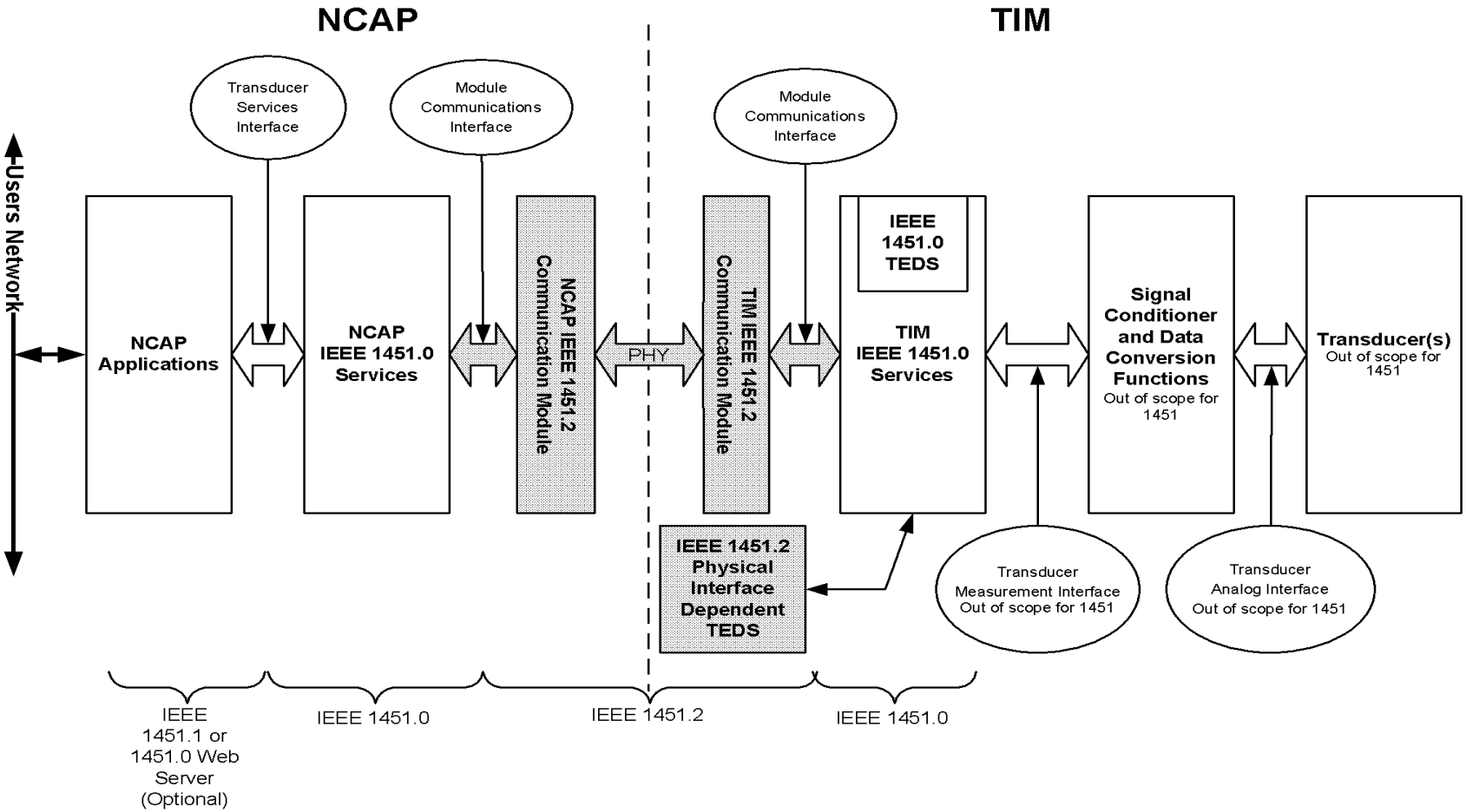

Block diagram and pin-out examples

Dot 2 Detail 3 of 5

- SPI

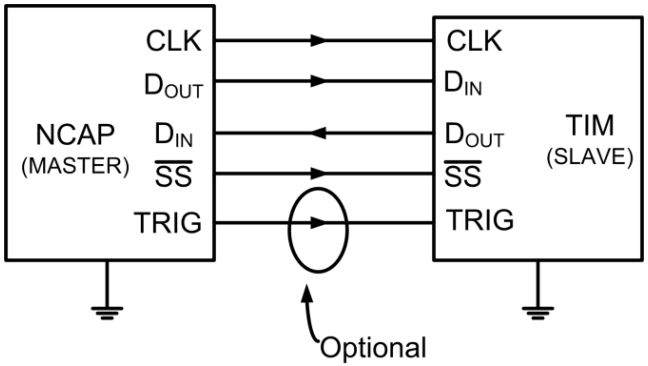

RS232

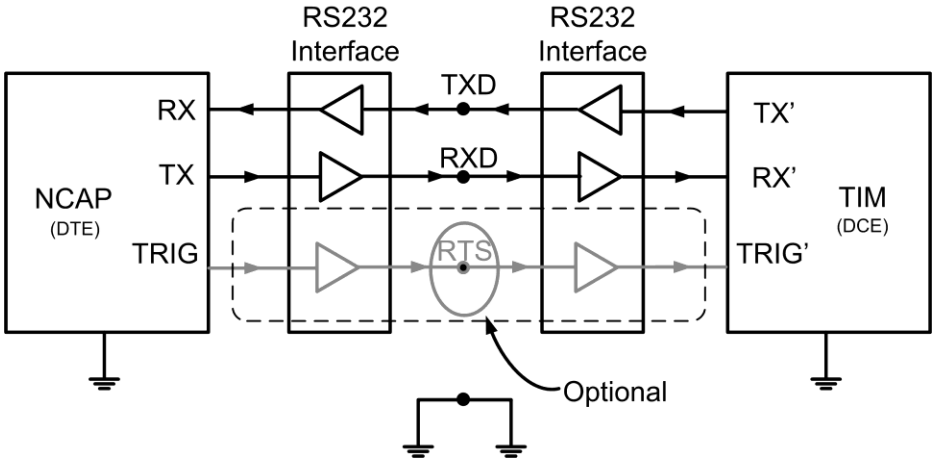

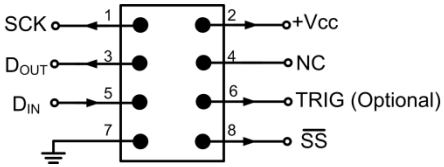

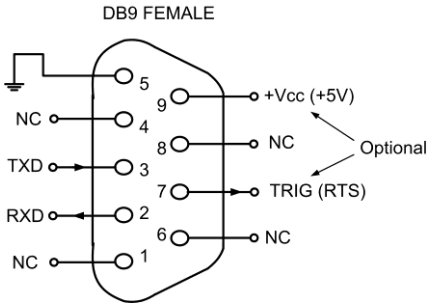

IEEE 21451.0 (Dot 0) TEDS Format

Dot 2 Detail 4 of 5

- Required TEDS [Memory block with defined format]
  - MetaTEDS
  - Channel TEDS
  - Calibration TEDS (unless SI units)
  - Xdr-name TEDS
  - Phy TEDS (e.g for RS232)
  - Also optional TEDS

- Data Transmission [specific octet format]
  - TEDS/Status requests
  - Triggering and configuration
  - Sensor read commands and data return
  - Actuator write commands and data sending

IEEE 21451 Command/Response (detail)

Dot 2 Detail 5 of 5

- Command format:
  - Header (6 bytes), Command (variable)
- Response Format:
  - Header (3 bytes), Data (variable)
- Command Examples (from NCAP to TIM)
  - TIM Discovery (to see which TIMs are available)
  - Channel Discovery (to see which Transducers are available)
  - Read TEDS (individually) – mostly binary
- Data Return Examples (from TIM to NCAP)
  - Data from Chan. 1 (# bytes and data type, e.g. 16-bit integer, set by TEDS)
  - Data from Chan 2
  - Commands and responses same for all types of sensors and physical layers on Network (Internet) side -- suitable for M2M & web networks
  - About 37 commands, many specialized (e.g. trigger, sleep, configure)

Dot 2 TIM Description

- TIM has RS232 port
- 11 Channels, including
  - Analog sensor inputs (4) and actuator outputs (2)
  - Digital I/O and alphanumeric display
  - Temperature sensor

TIM-01
Esensors

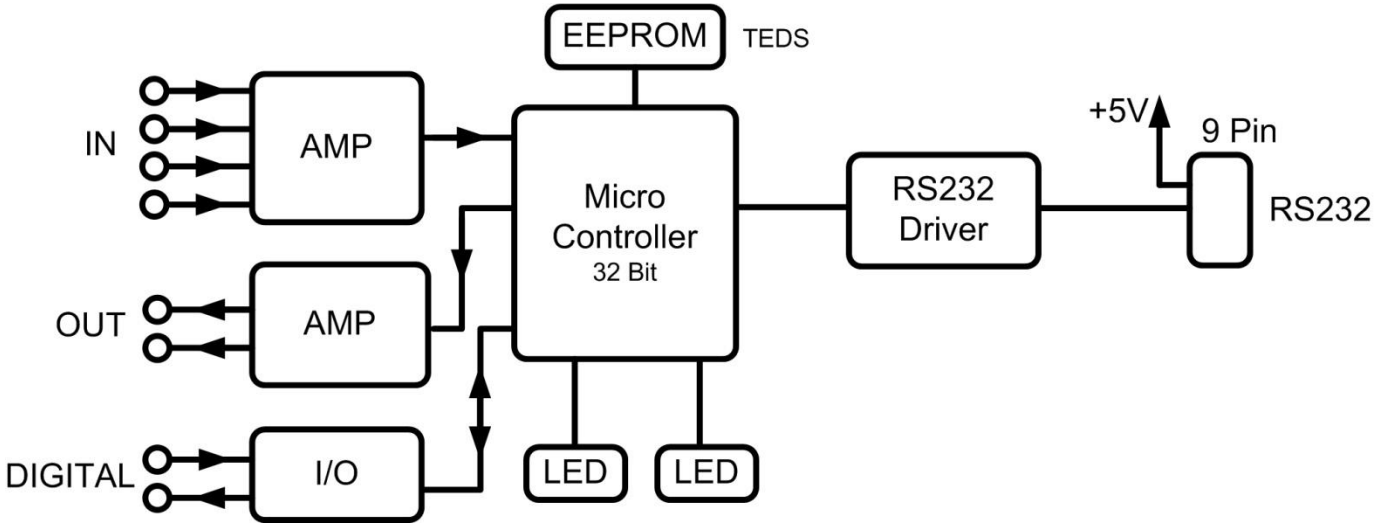

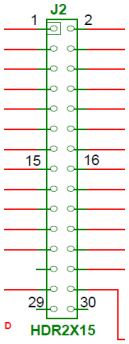

Input Circuit Diagram for Dot2 TIM

More Detail 1 of 3

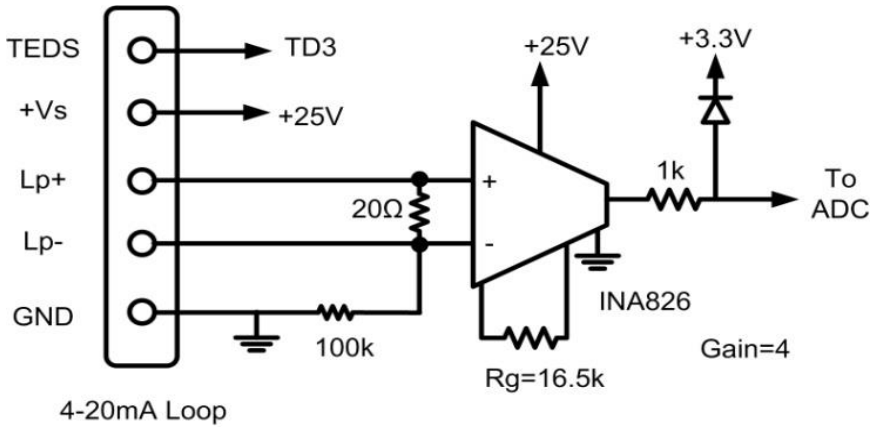

4-20 mA input

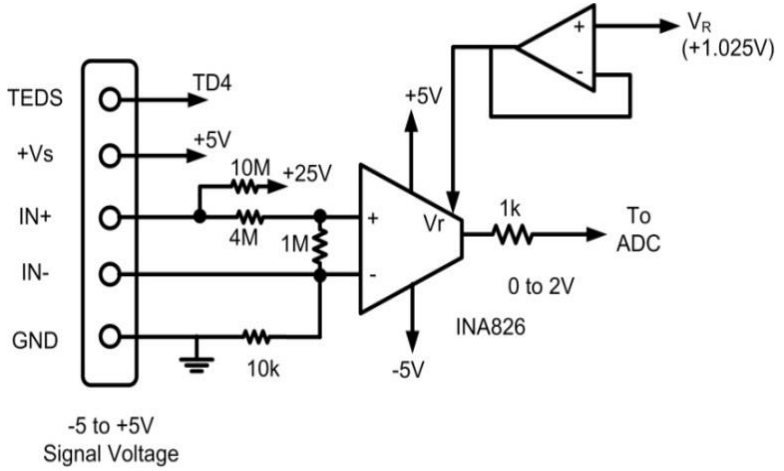

0-5v input

IEEE 21451.0 Headers
(detail)

More Detail 2 of 3

- **Command message structure**
  - Destination TransducerChannel Number (most significant octet)
  - Destination TransducerChannel Number (least significant octet)
  - Command class
  - Command function
  - Length (most significant octet)
  - Length (least significant octet)
  - Command-dependent octets . . .
- **Reply message structure**
  - Success/Fail Flag
  - Length (most significant octet)
  - Length (least significant octet)
  - Reply-dependent octets

Data Readout Example (detail)

More Detail 3 of 3

- IEEE 1451 Data output string

0x01C98C880F4F4B0E	0xB8922B6D,	0xB892EC71,	0xAF215520,	0xAF221559,
Time Stamp	Channel 1 data	Channel 2 data		

0xB8A33696,	0xB8A44BD3,	0xB8A370C9,	0xB8A4118E
		Channel 7 data	Channel 8 data

- Data is 32 bit floating point SI units (e.g. volts))

  (as specified by TEDS)

- Time stamp format (TAI, IEEE 1588)
  - 0x01C98C880F4F4B0E in hexadecimal

    Wed, 11 February 2009 15:35 (date and time from first 32 bits)
  - # of nanoseconds (lower 32 bits, 0F4F4B0E): 256854798

NCAP Description

- NCAP has Dot 2 (RS232, USB) and Dot 5 (WiFi) ports
- Network connection via Ethernet (100 base T) – HTTP format

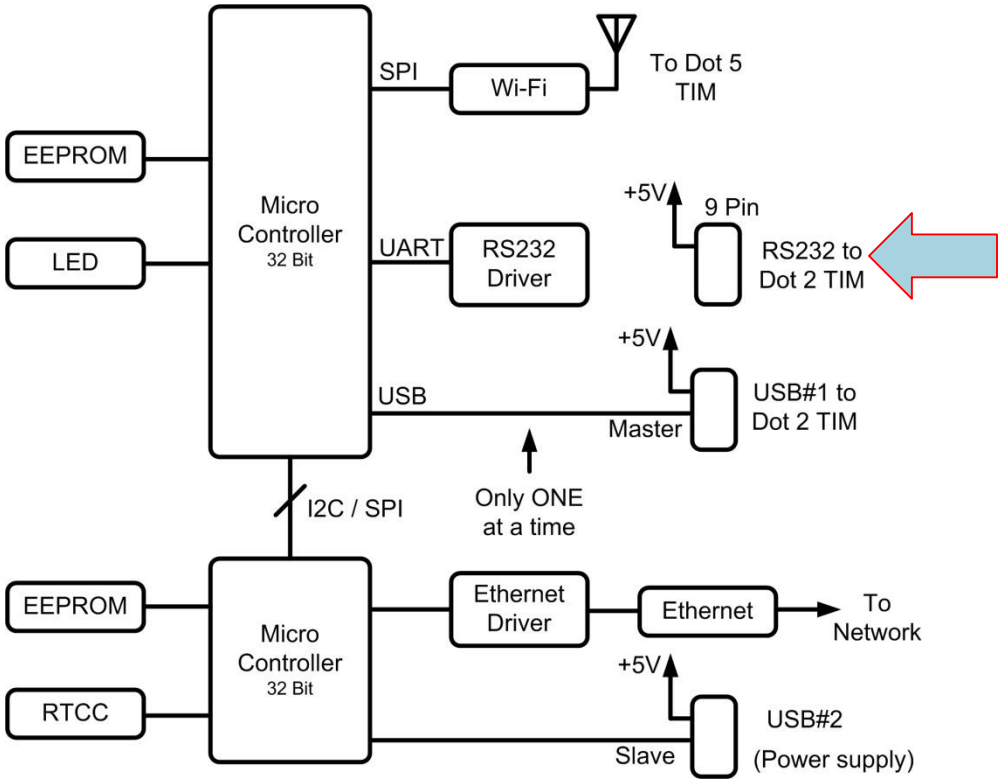

NCAP-01
Esensors
Principle engineer: Dr. Yuan Ma

Dot 4 Interface

- Dot4 combines analog signal and digital TEDS
- Modification of Dot2 TIM to accommodate Dot4 sensors
- TEDS is Dot0 with Dot4 addition
- Digital data is Dot2 format
- No standard Dot 4 to Dot2 (or Dot0) conversion

IEEE 21451.4 -- TEDS only version

- Dot 4 is separate branch of the standard which does not follow the Dot 0 convention (including the TEDS)
- Data is analog except for the TEDS – no a/d specified
- Class 1 (coax) and Class 2 (multi-pin) versions specified
- TEDS stored in “1-wire” EEPROM (Maxim/Dallas)

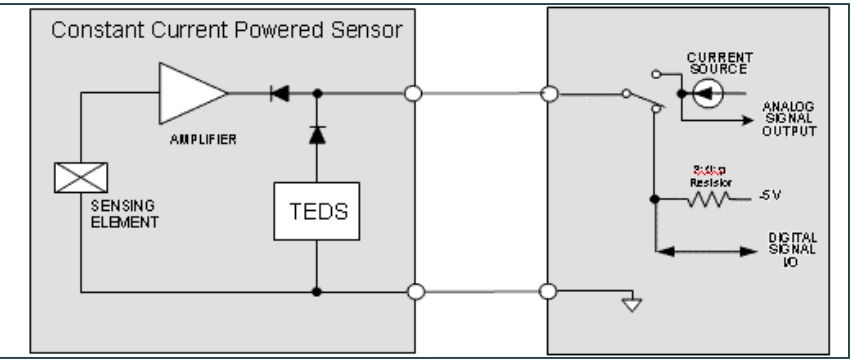

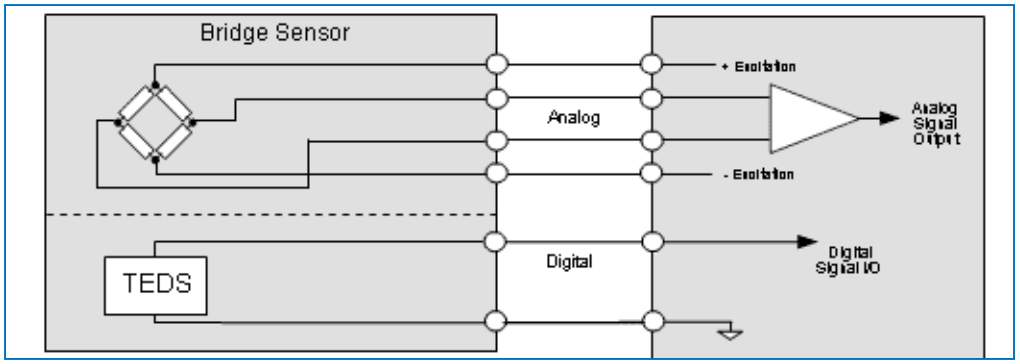

Dot4 Block Diagram

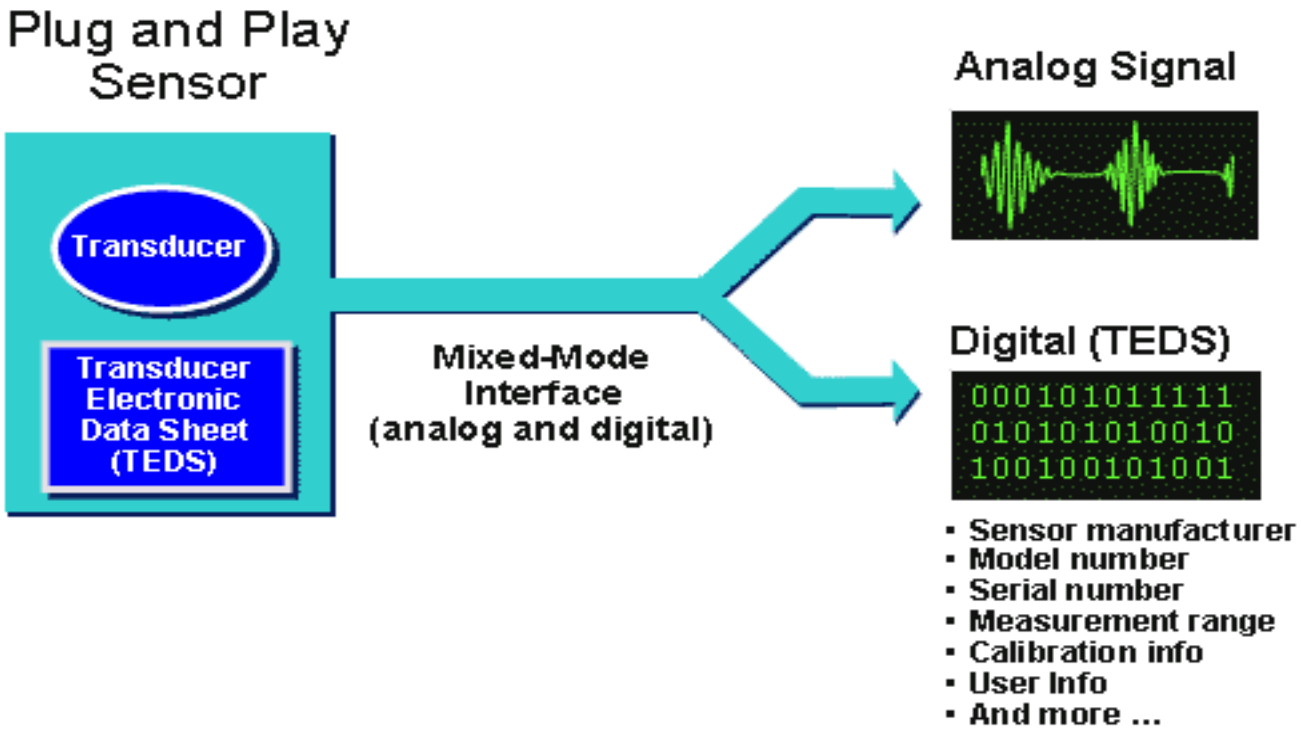

Combined Dot2/4 TIM/NCAP Prototype Block Diagram

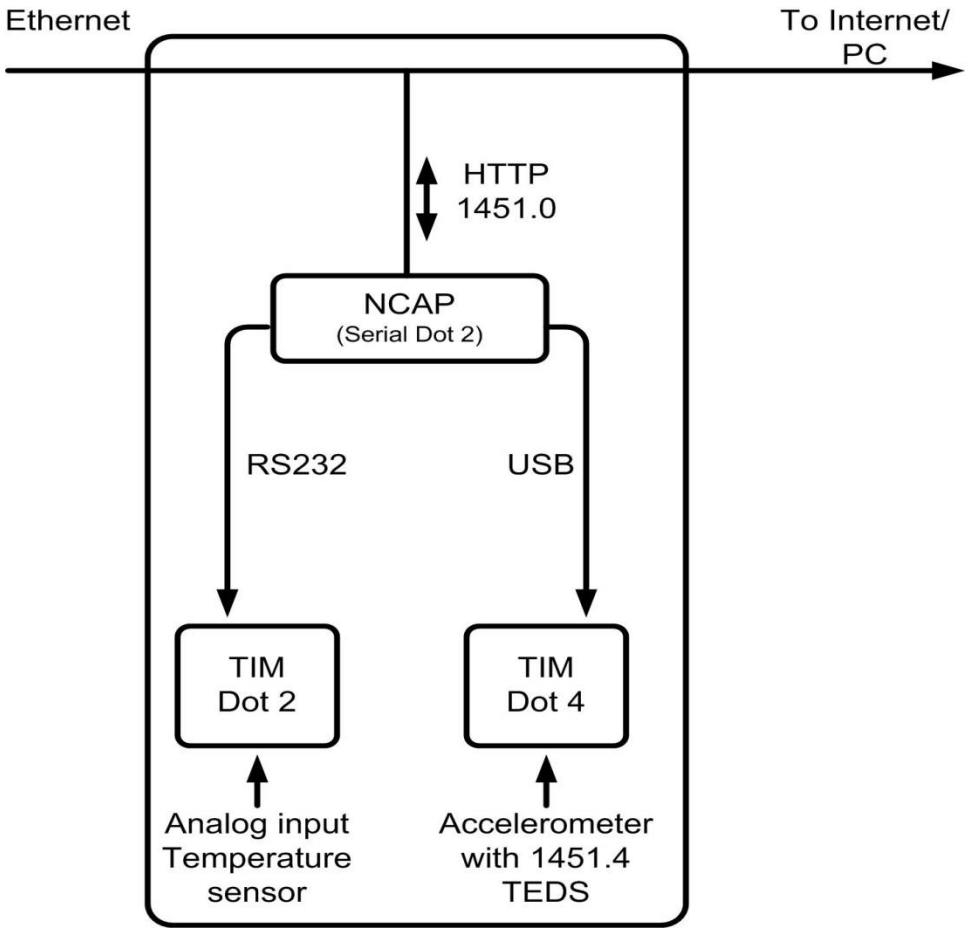

Block Diagram of Dot 4/2 TIM Adaptor

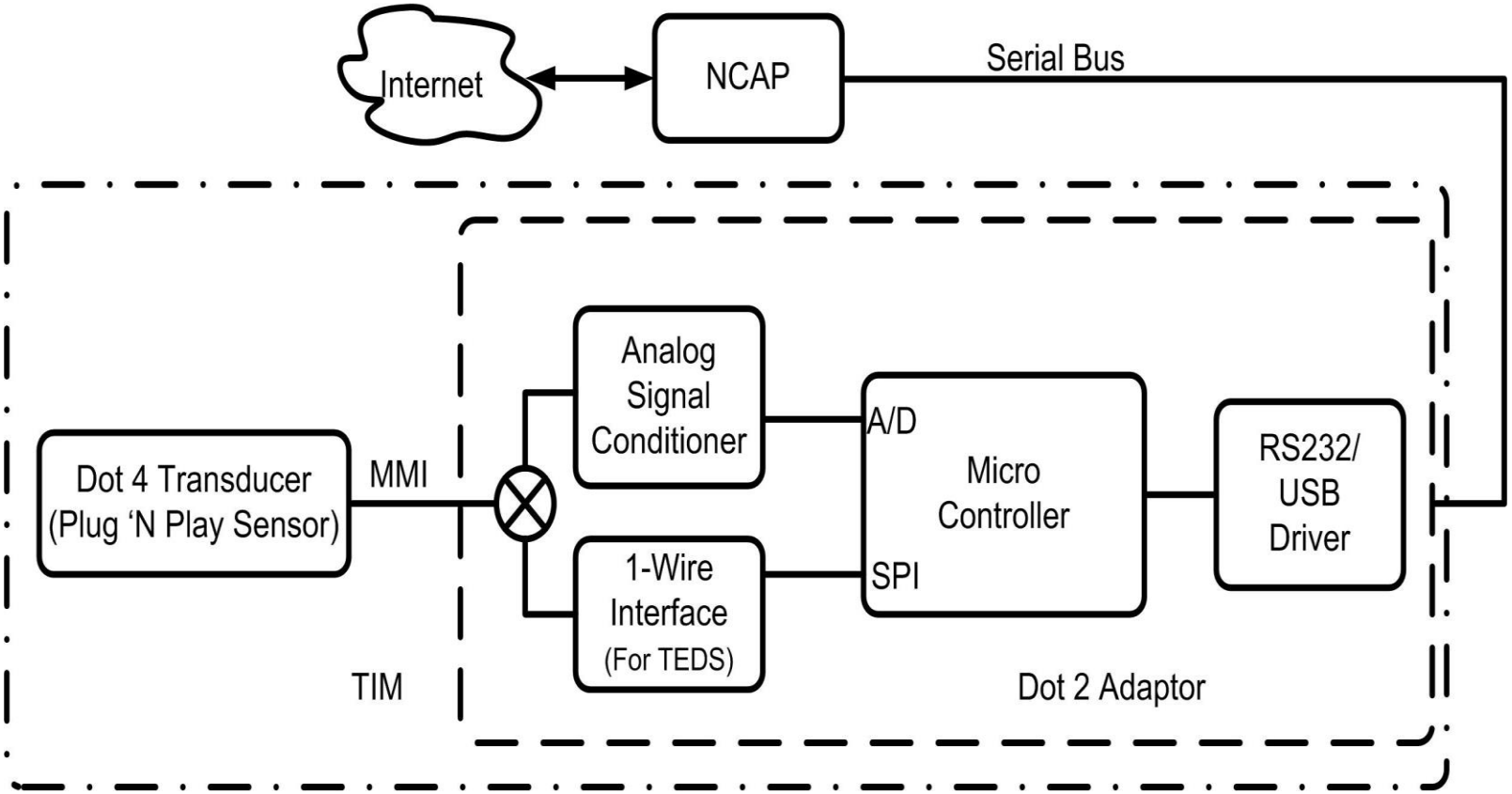

IEPE Interface (detail)

Dot 4 Detail 1 of 3

- Integrated Electronic Piezo Electric Interface (IEPE), also IPE etc.
- Used in this industry for years

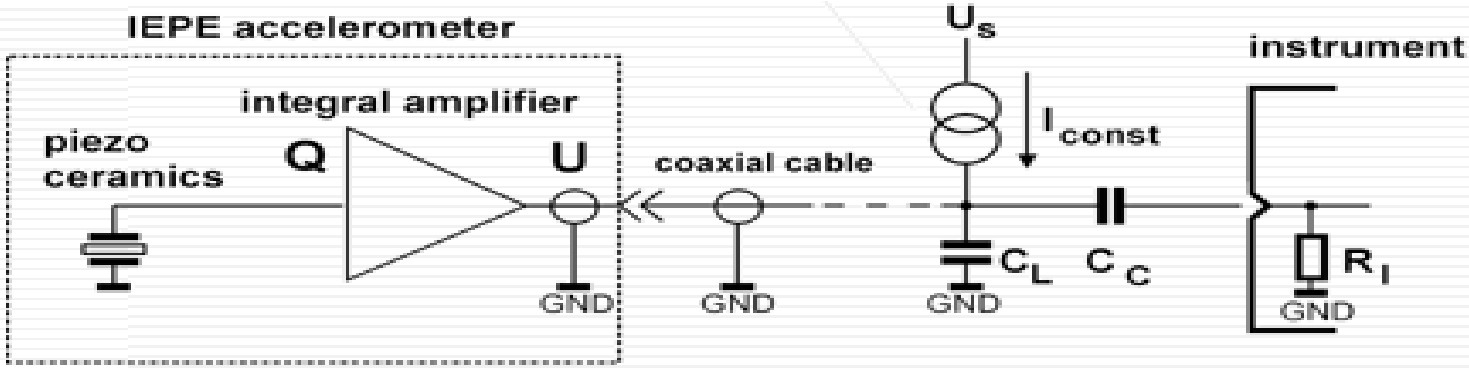

C_L	cable capacitance (approx. 100pF / m)
C_C	coupling capacitor, typically 1 .. 10µF
I_{const}	constant current source, recommended 4 mA
R_I	input resistance
U_s	supply voltage of constant current source, recommended > 18 V

. Circuit Diagram of IEPE Interface (detail)

Dot 4 Detail 2of 3

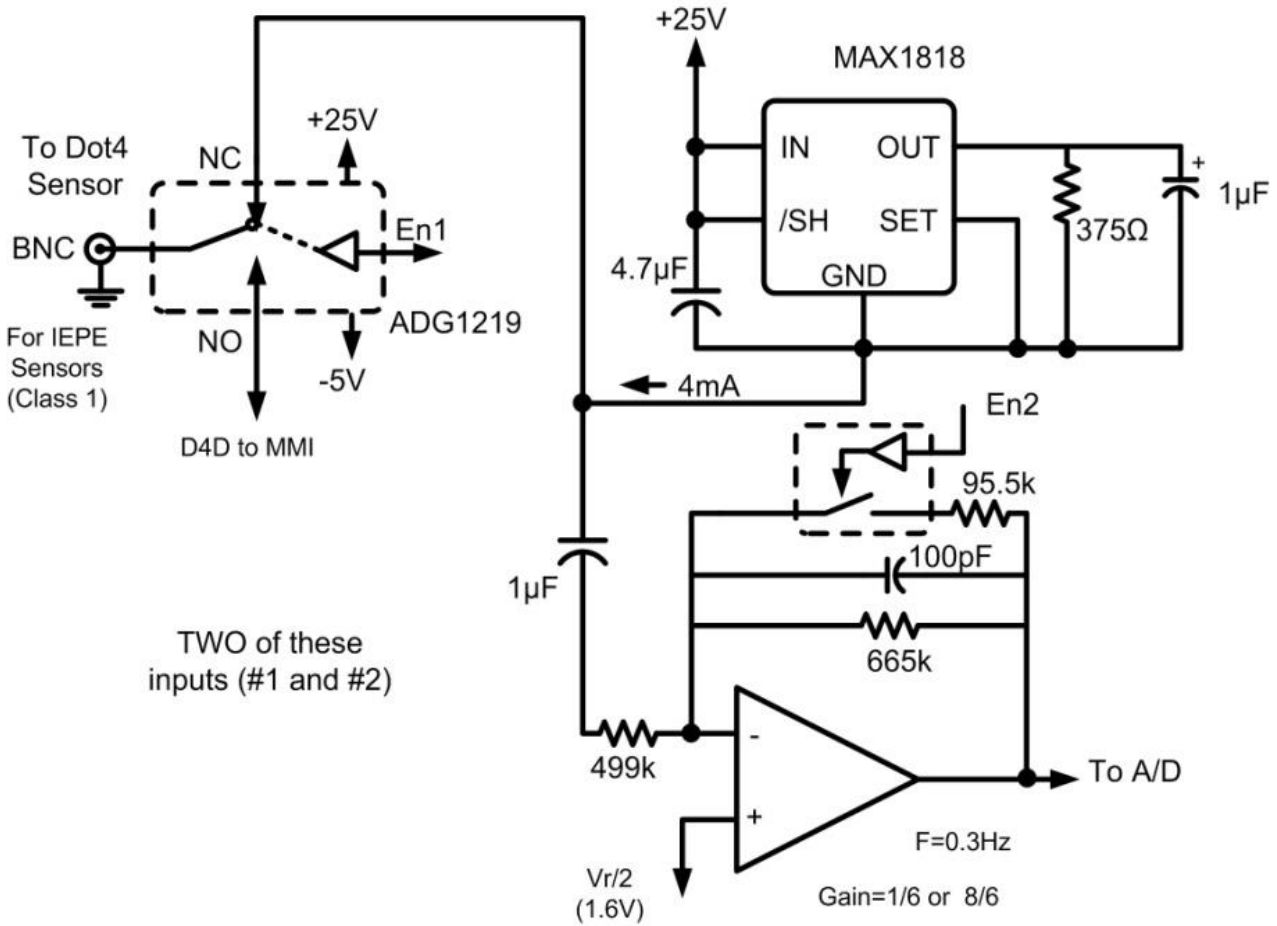

Detailed Block Diagram of Dot 4/2 TIM

Dot 4 Detail 3of 3

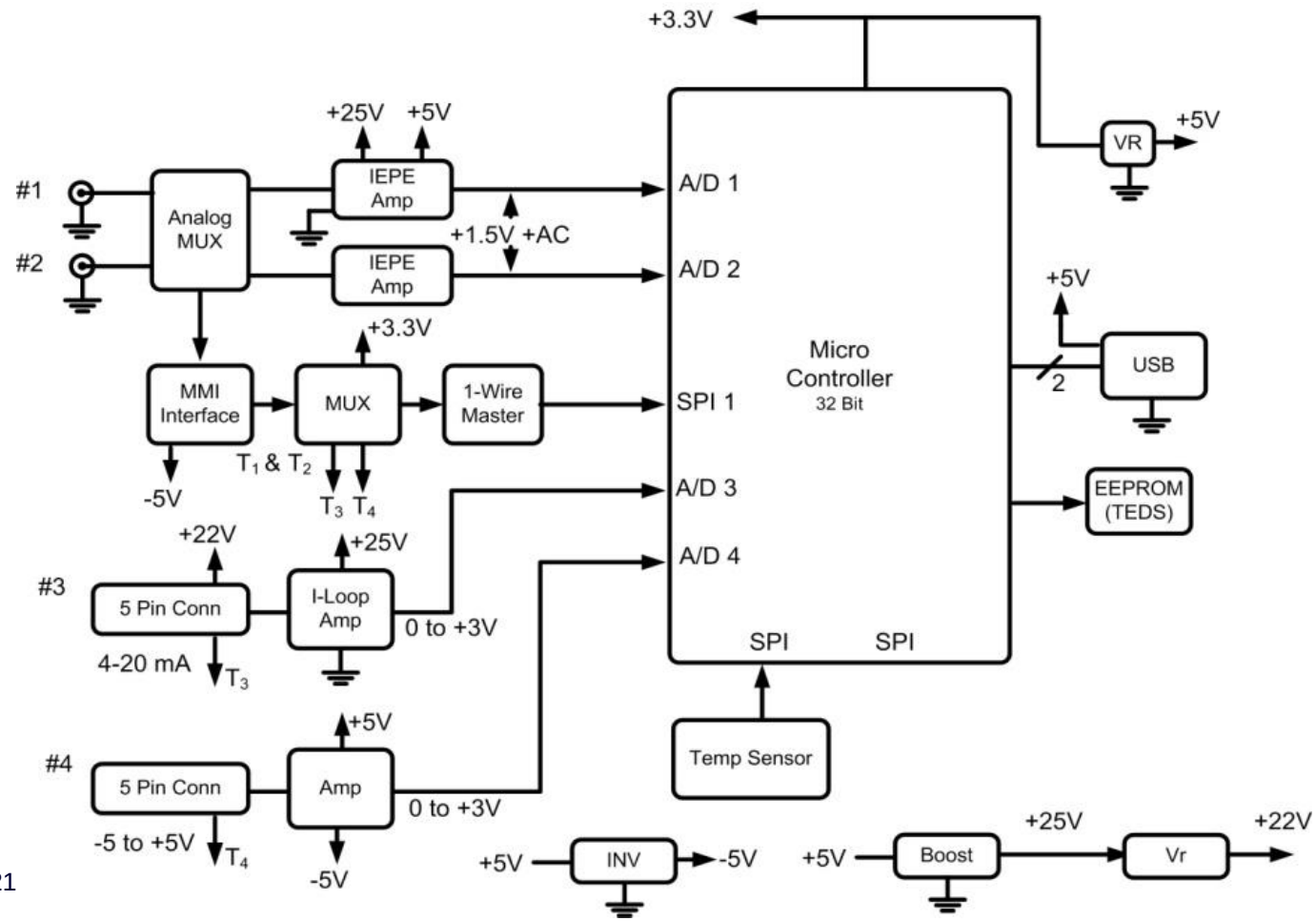

Dot 4 TIM

With Dot 2 Data Acquisition

- Class 1 TIM configured for accelerometer
- Class 2 TIM configured for 4-20 ma current loop or 0-5 signal voltage
- Dot 4 style TEDS (1-wire) read
- A/D read same as for Dot 2 sensor – not standard
- Conversion from Dot 4 to Dot 0 TEDS not done (virtual TEDS?)

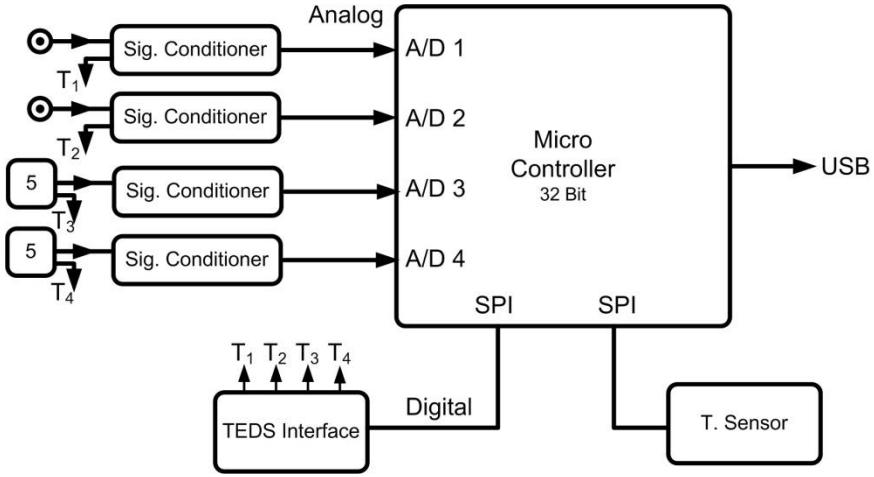

Dot 4 Block Diagram

Part of Dot 2
TIM-01

Dot 2/4 Combination Summary

- Dot4 TEDS is read and stored in NCAP memory for retrieval by Internet
- Dot 0 style TEDS is added
- Analog data is acquired in digital format
- NCAP transmits data to Internet as a Dot2 TIM
- Tested with commercial Dot4 accelerometer

TIM Response Example #1

- Read by standard Internet Browser
- Setup step after TEDS query

IEEE 1451 Development Kit Application

- Overview
- Status
- Visualizing Outputs
- Transducer Discovery
- Read Transducer Data
- Write Transducer Data
- Query TEDS
- Read Raw TEDS
- Write Raw TEDS
- Network Configuration

Read Raw TEDS from TIM device

TIM Id: 1

Channel Id: 1

Timeout(seconds): 10

TEDS type: 1

Read Raw Teds

TIM Response

Name	Value
Error code	0
TIM Id	1
Transducer Channel Id	4
TEDS Type	12 , XdcrName
Raw TEDS	00, 00, 00, 13, 03, 04, 00, 0C, 01, 01, 04, 01, 00, 45, 53, 2D, 54, 49, 4D, 30, 34, FD, BF

TIM Response Example #2

- Read by standard Internet Browser
- Next setup step after TEDS reading

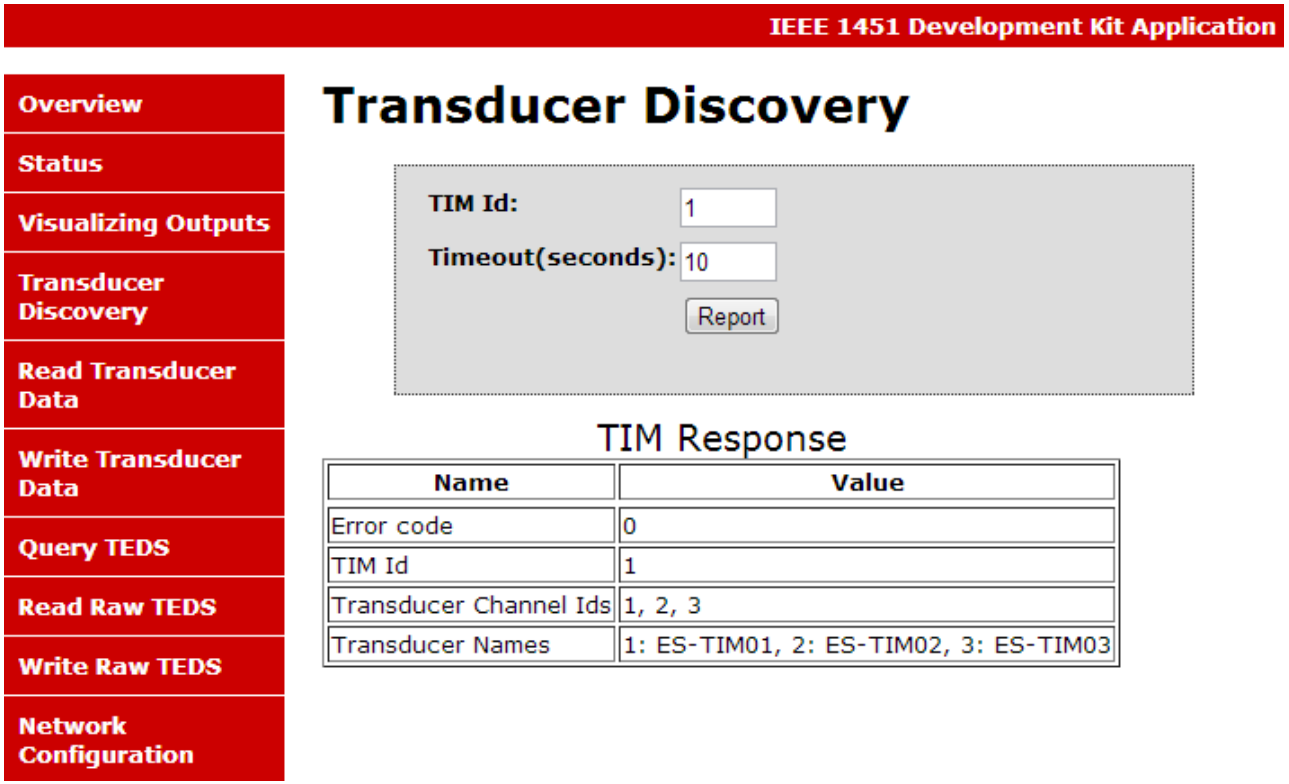

TIM Write Command

- TIM read example given above

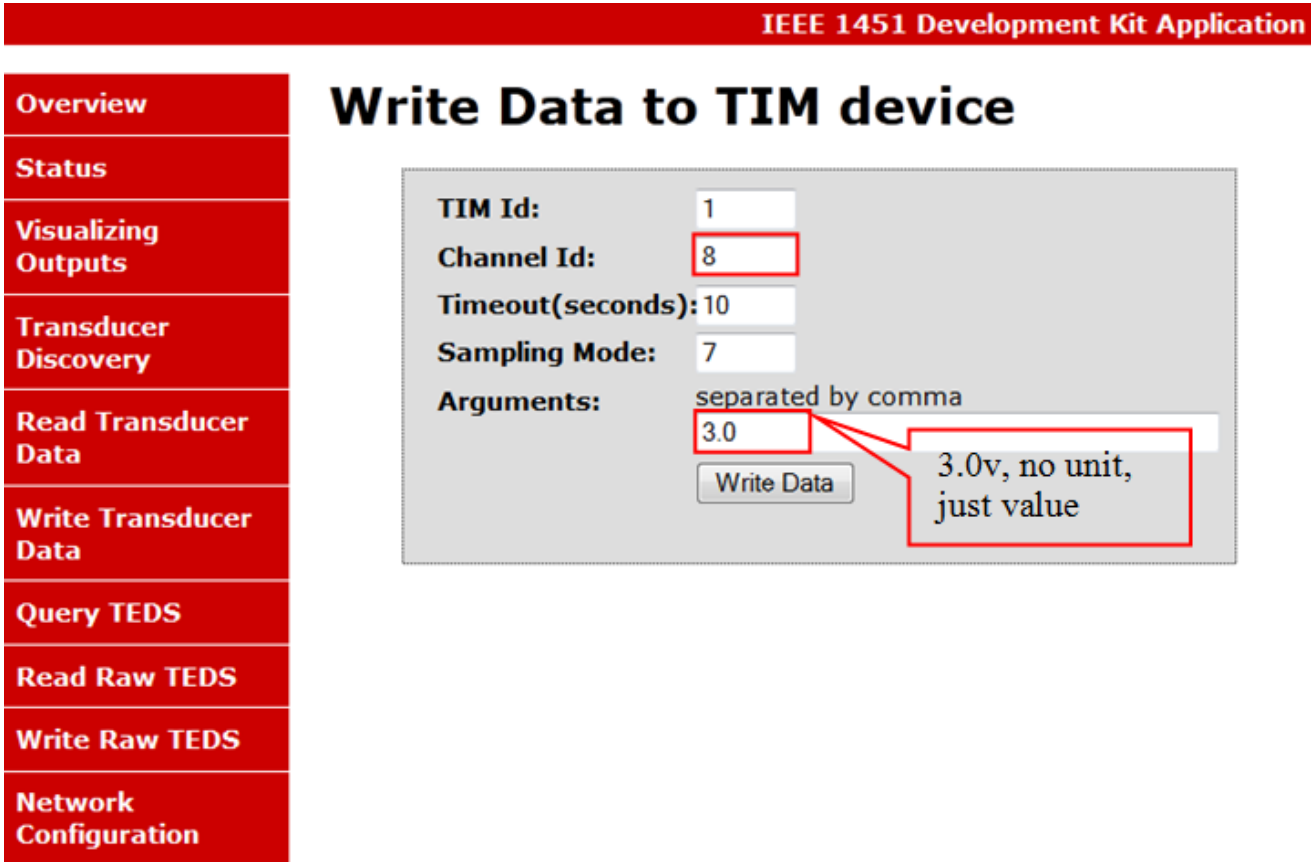

Data Readout Example #3
(via Internet)

IEEE 1451 Development Kit Application

- Overview
- Status
- Visualizing Outputs
- Transducer Discovery
- Read Transducer Data
- Write Transducer Data
- Query TEDS
- Read Raw TEDS
- Write Raw TEDS
- Network Configuration

Read Data from TIM device

TIM Id: 1
Channel Id: 1
Timeout(seconds): 10
Sampling Mode(7): 7
Read Data

TIM Response

Name	Value
Error code	0
TIM Id	1
Transducer Channel Id	1
Transducer Data	2.972

Operating Manual
for Dot2/4 TIM and NCAP

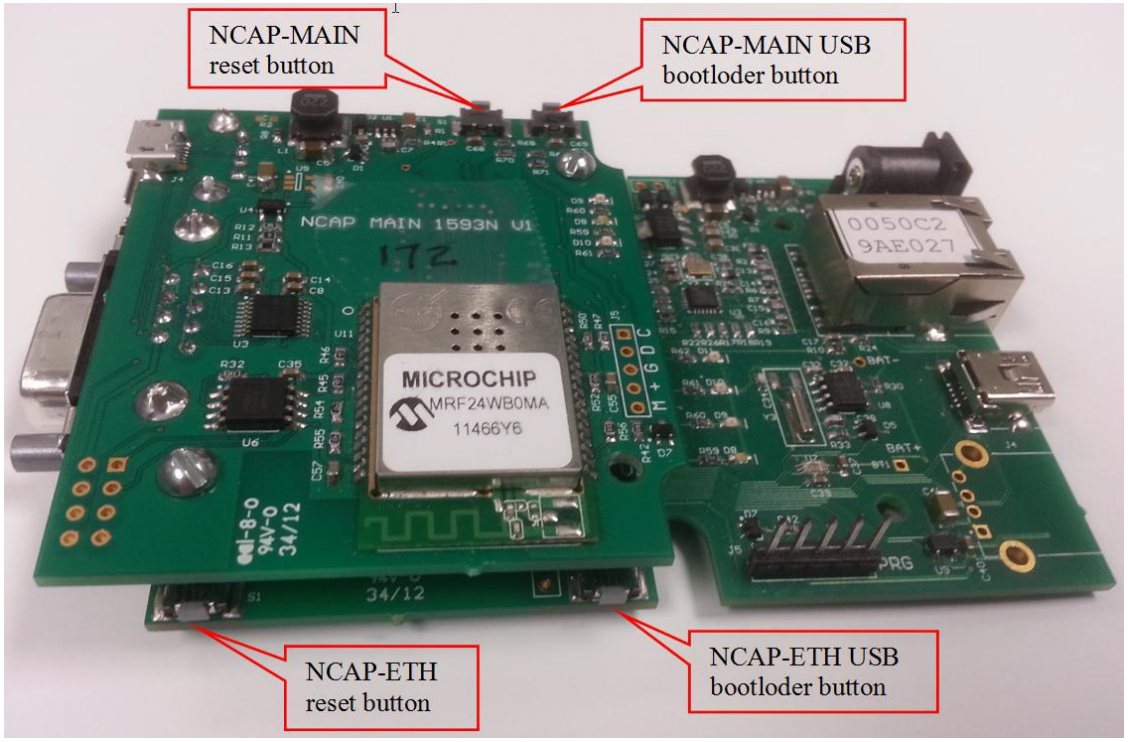

- Available at:
  http://www.eesensors.com/media/wysiwyg/pdf/1451_manual.pdf

Suggestions for
IEEE 21451 Standard Further Development

- Finish Dot1-4 (XMPP) standard
- Finish Dot2 Ballot
- Update Dot0
- Fund demonstrations and test lab
- Develop on-line compliance testing
- Publicize standard

Summary

- Reviewed IEEE 21451 Standard
- Described a Dot 2 NCAP and TIM
- Discussed the Dot4 Modification
- Gave data readout examples
- Suggested future work on the standard

End

- Backup Slides Follow

Contact: designer@eesensors.com

Sensor Web Concept

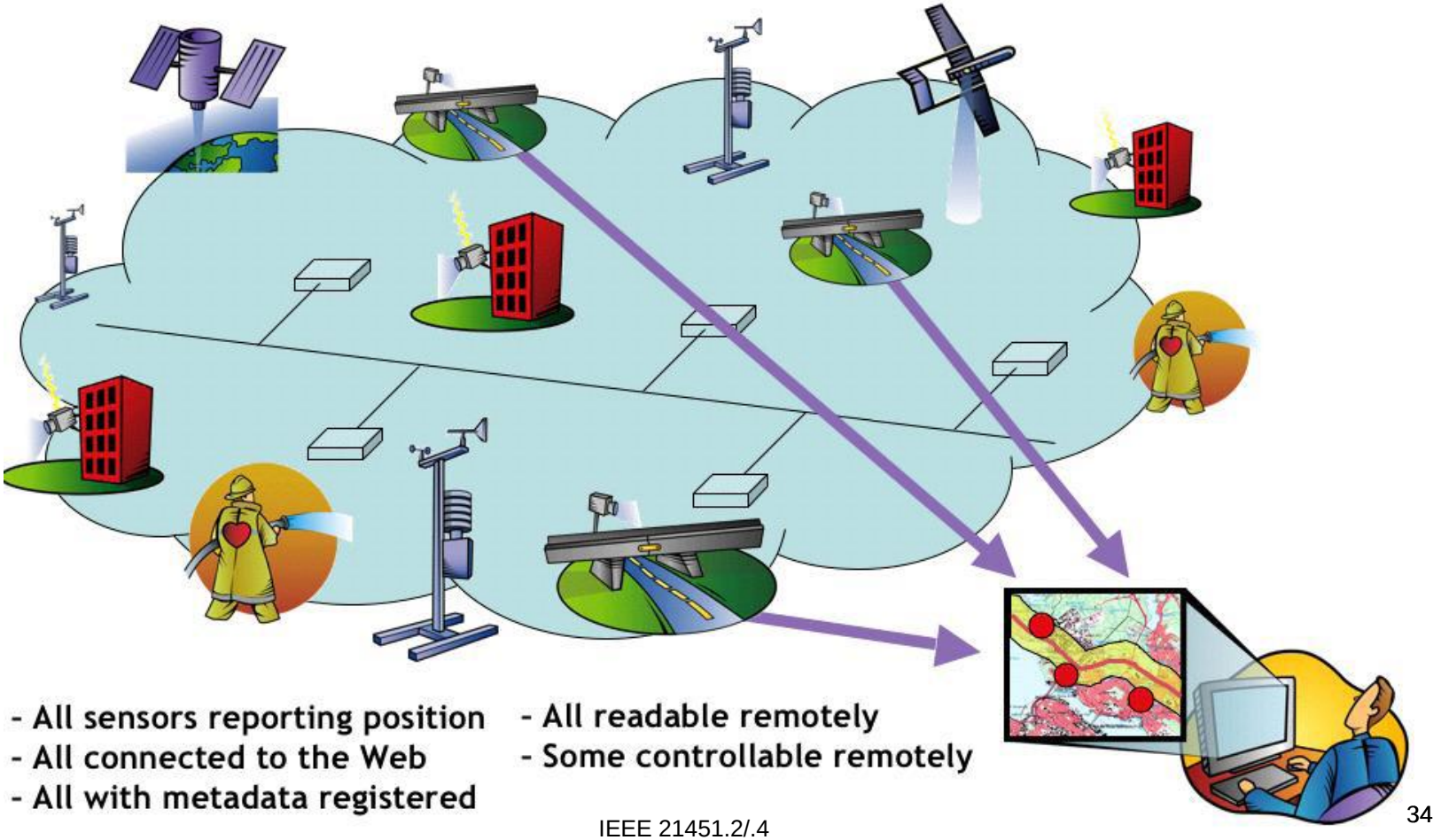

Network side (NCAP) options
(wired)

- Internet/Ethernet
- PC Readout
- Industrial network

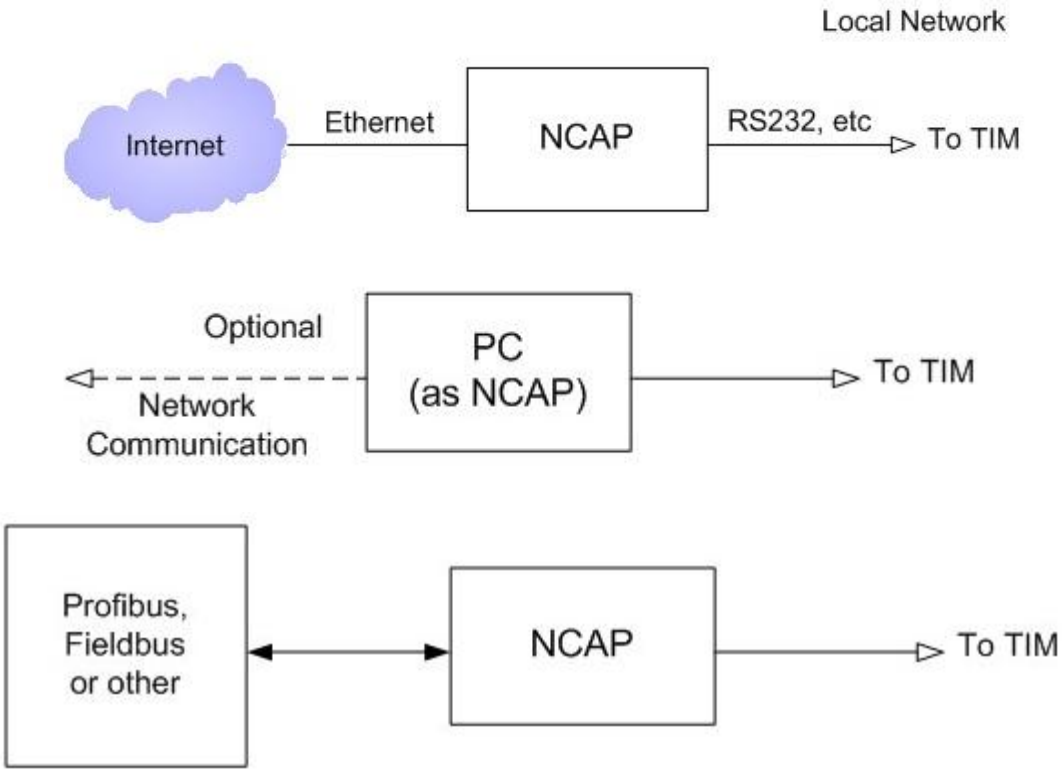

All use Dot 0 & 2 protocol

Earlier History of Dot 2 and Dot 0

- Original IEEE 1451.2 standard adopted in 1997 which included TEDS and basic data format
- Dot 2 revision started in 2006 but suspended following decision to separate out TEDS/data formats as Dot 0
- Dot 0 was finished in 2007 (also Dot 5)
- Dot 2 was restarted in 2009 and mostly done in 2011
- First ballot (approved) in 2012 – small fixes made
- Second ballot pending 2014 --- with ISO blessing

RS232 TIM via USB example

- External RS232 to USB adaptor method

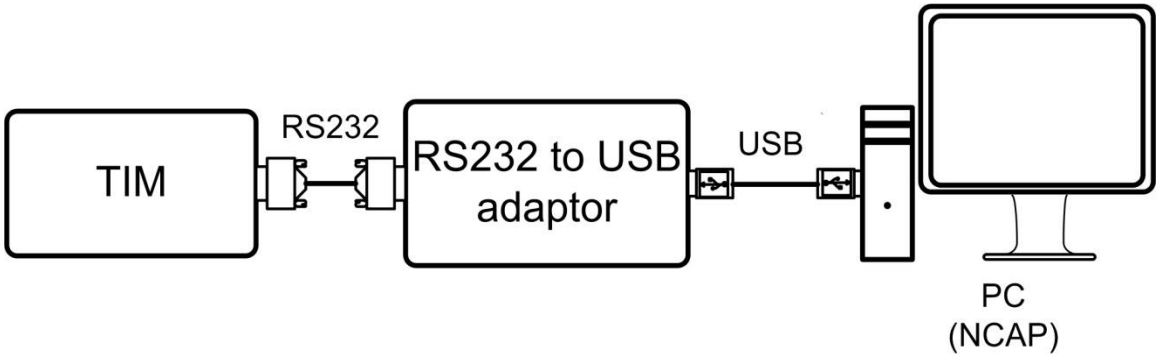

- Internal UART to USB converter method

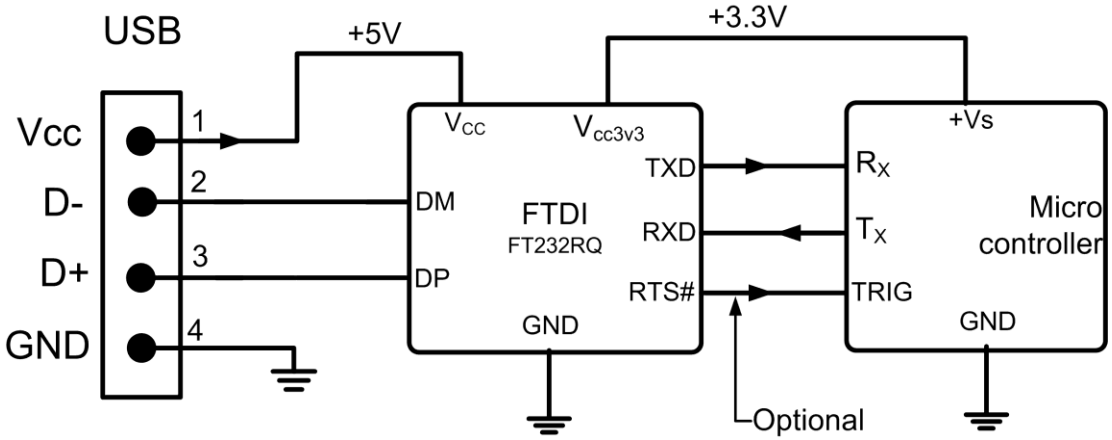

Dot 4 TEDS

- Stored in 1-wire EEPROM
- Compact binary format

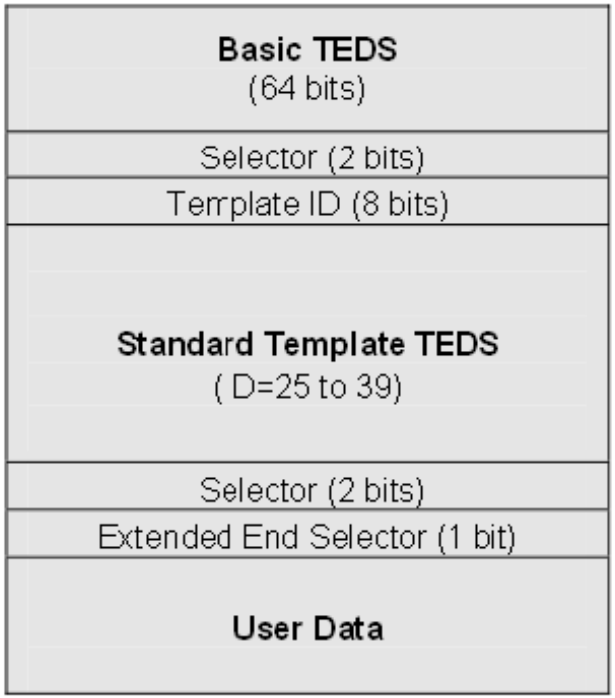

Table 1. Basic TEDS Content

	Bit Length	Allowable Range
Manufacturer ID	14	17 – 16381
Model Number	15	0-32767
Version Letter	5	A-Z (data type Chr5)
Version Number	6	0-63
Serial Number	24	0-16777215

Table 6. Current Loop Output Sensors Template (ID = 31) Summary

Select	Property	Description	Access	Bits	Data Type (and Range)	Units
–	TEMPLATE	Template ID	–	8	Integer (value = 31)	–
–	%ElecSigType	Electrical signal type	ID	-	Assign =1, "Current Sensor"	–
Select Case – Selects Type of Physical Measurand (Units)				6	Select Case	–
Cases 0 - 45	%MinPhysVal	Minimum physical value	CAL	32	Single	Various*
	%MaxPhysVal	Maximum physical value	CAL	32	Single	Various*
Select Case – Selects Full-Scale Electrical Value Precision				1	Select Case	–
Case 0	%MinElecVal	Minimum current output	CAL	-	Assign = 4.0	mA
	%MaxElecVal	Maximum current output	CAL	-	Assign = 20.0	mA
Case 1	%MinElecVal	Minimum current output	CAL	32	Single	Amps
	%MaxElecVal	Maximum current output	CAL	32	Single	Amps
–	%MapMeth	Mapping Method	ID	-	Assign = 0, "Linear"	–
–	%RespTime	Response time	ID	6	ConRelRes (1E-6 to 7.9, 15%)	seconds
Select Case –Selects Loop Powered Versus External Powered				1	Select Case	–
Case 0 (Loop)	%LoopSuppyMin	Minimum compliance	ID	9	ConRes (0.1 to 51.1, step 0.1)	Volts
	%LoopSuppyMax	Maximum compliance	ID	9	ConRes (0.1 to 51.1, step 0.1)	Volts
Case 1 (Ext)	%ExciteAmplNom	Power supply level, nominal	ID	9	ConRes (0.1 to 51.1, step 0.1)	Volts
	%ExciteAmplMin	Power supply level, min.	ID	9	ConRes (0.1 to 51.1, step 0.1)	Volts
	%ExciteAmplMax	Power supply level, max.	ID	9	ConRes (0.1 to 51.1, step 0.1)	Volts
	%ExciteType	Power supply type	ID	1	DC or Bipolar DC	–
	%ExciteCurrentDraw	Max current at nominal power	ID	6	ConRelRes (1E-6 to 2, 15%)	Amps
–	%CalDate	Calibration date	CAL	16	DATE	–
–	%CalInitials	Calibration initials	CAL	15	CHR5	–
–	%CalPeriod	Calibration period	CAL	12	UNINT	days
–	%MeasID	Measurement location ID	USR	11	UNINT	–

Purpose of IEEE 1451 standards

- Provides common digital data format for all sensors and actuators (i.e. transducers) – A universal transducer standard
- Formal Title of IEEE 1451.0 -- *IEEE Standard for a Smart Transducer Interface for Sensors and Actuators - Common Functions, Communication Protocols, and Transducer Electronic Data Sheet (TEDS) Formats*
- Operates below (supplements) communication protocols such as WiFi, RS232, HTTP, XML which do not specify the meaning of the sensor data
- Aimed at Machine-to-Machine and Internet of Things communication – Interoperable and without operator intervention

IEEE 1451 Advantages

- Comprehensive enough to cover nearly all sensors and actuators in use today (not 20/80% approach)
- Many format and operating mode options
- Extensive units, linearization and calibration options
- Compatible with all wired and wireless sensor buses and networks (point-to-point, mesh …)
- Efficient binary protocol (especially suitable for wireless)
- No competing sensor standard with wide scope needed to cover all transducers

IEEE 1451 Advantages
(more detailed)

- Comprehensive enough to cover nearly all sensors and actuators in use today (not 20/80% approach)
- Many operating modes

  (buffered, no-buffer, grouped sensors, timestamps, timed data, streaming …)
- Extensive units, linearization and calibration options
- Multiple timing and data block size constraints handled.
- Compatible with most wired and wireless sensor buses and networks (point-to-point, mesh, TIM-to-TIM, mixed networks).
- Efficient binary protocol (especially suitable for wireless)
- But*: Standard is 400+ pages for basic part, over 1500 page total*

Previous Demonstration NCAP and TIM

For Dot 2, Dot 4 (and Dot 5)

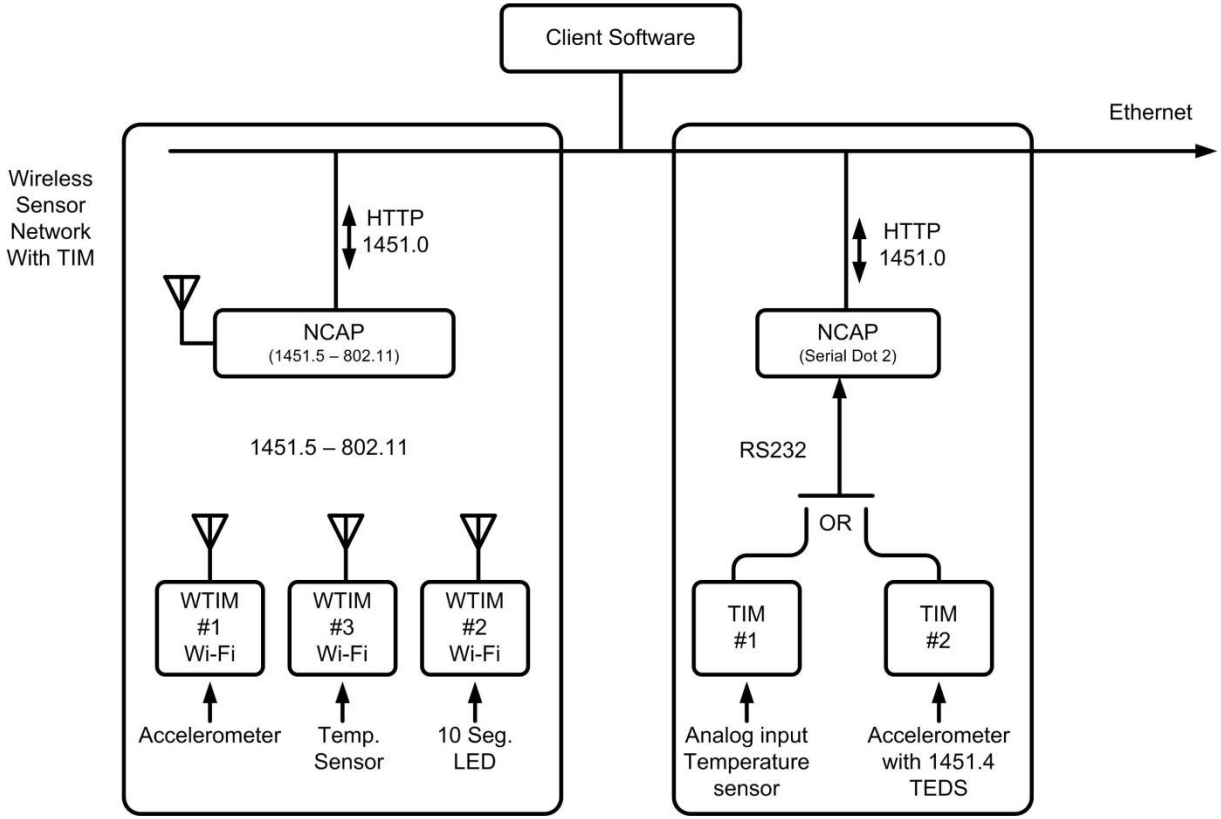

System Block Diagram

Open Access Downloads Available

Manual:
http://www.eesensors.com/media/wysiwyg/pdf/1451_manual.pdf

Blank

- Review