IEEE 1451 Smart Transducer Standard for HVAC Applications

Darold Wobschall, Ph. D.
Esensors Inc.
Amherst NY

Agenda

Part A

- Describe the IEEE 1451 transducer standard

Part B

- Discuss application of standard to HVAC applications.

Part A

- Describe smart transducers/sensors
- Discuss sensor networks, both wired and wireless
- Introduce the IEEE 1451 transducer standard

Networked Sensor Block Diagram

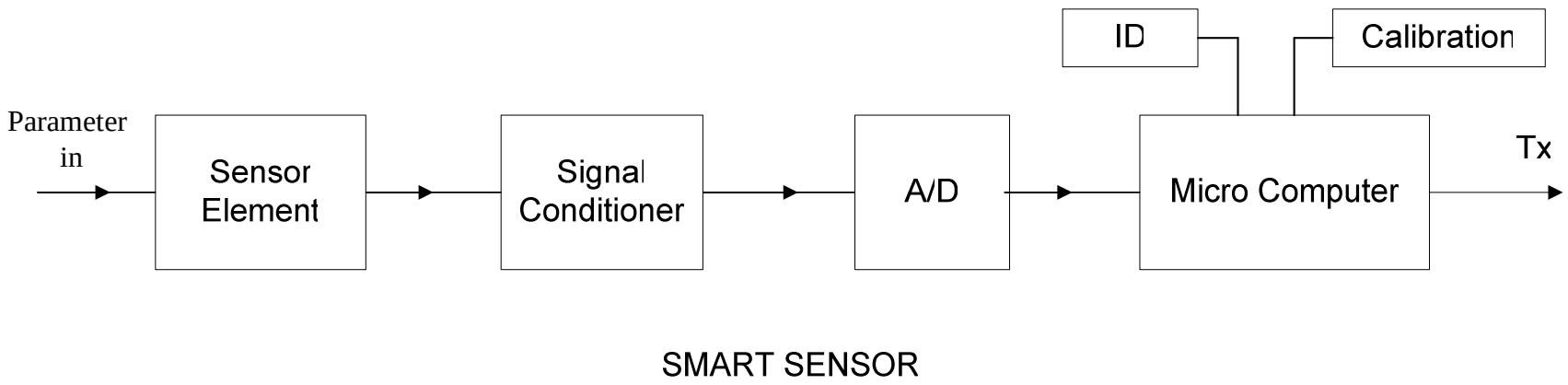

A Networked sensor is a smart sensor

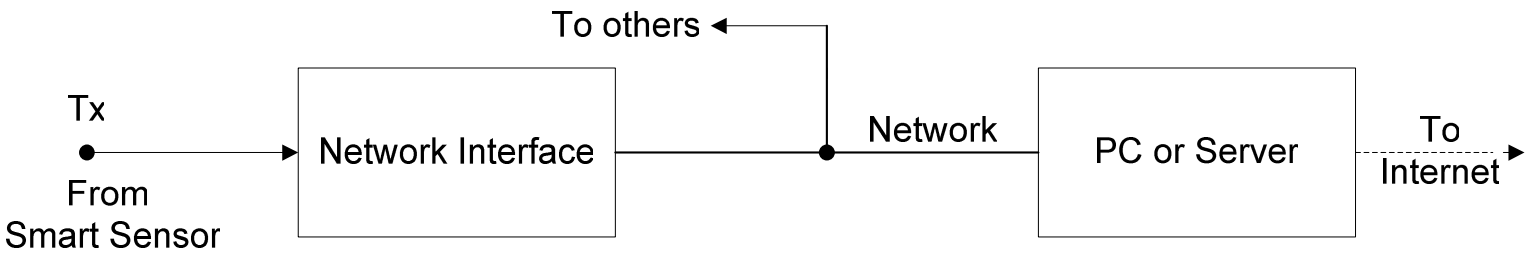

Networked Transducer Features and Applications

Features

- Plug and play
- Multiple sensors on one network or bus

Applications

- Monitoring and Control
- Automatic testing
- Machine to Machine (M2M) sensor data communications
- Wide area (Nationwide) data collection

Sensor/Transducer Networks

- A network connects more than one addressed sensor (or actuator) to a digital wired or wireless network
- Both network and sensor digital data protocols are needed
- Standard data networks can be used but are far from optimum
- Numerous (>100) incompatible sensor networks are currently in use – each speaking a different language

The Tower of Babel

IEEE 1451 – the Universal Transducer Language

- Problem: too many network protocols in common use
- Narrow solutions and borrowed protocols have not worked
- Sensor engineers in the fragmented sensor industry need a simple method of implementation

- *How can it be done*?
- We need something like USB, except for sensors
- Solution: the IEEE 1451 Smart Transducer Protocol open standard is the best universal solution
- Supported by NIST, IEEE and many Federal agencies

A review of the

IEEE 1451 Smart Transducer Concept

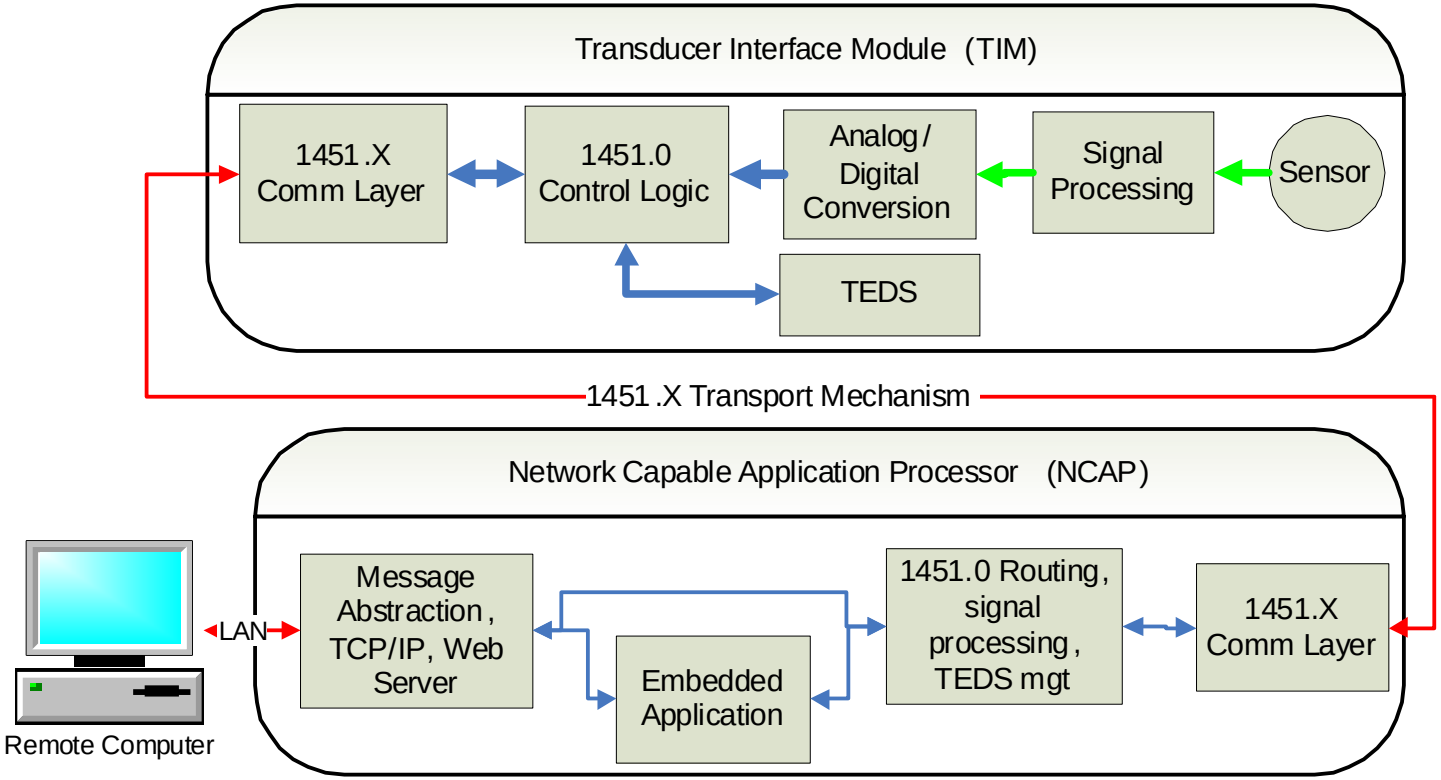

IEEE 1451 Advantages

- Comprehensive enough to cover nearly all sensors and actuators in use today (not 20/80% approach)
- Many operating modes
  (buffered, no-buffer, grouped sensors, timestamps, timed data, streaming …)
- Extensive units, linearization and calibration options
- Multiple timing and data block size constraints handled.
- Compatible with most wired and wireless sensor buses and networks (point-to-point, mesh, TIM-to-TIM, mixed networks).
- Efficient binary protocol (especially suitable for wireless)
- Standard is 400+ pages for basic part, over 1500 page total

But the Complexity!

- A comprehensive standard is necessarily complex
- There was little adoption of the original IEEE 1451.2 (TII) standard because of its perceived complexity
- Manual preparation of the TEDS is not practical -- A TEDS compiler is needed
- A compliance test procedure is also desirable to prove that a design is correct

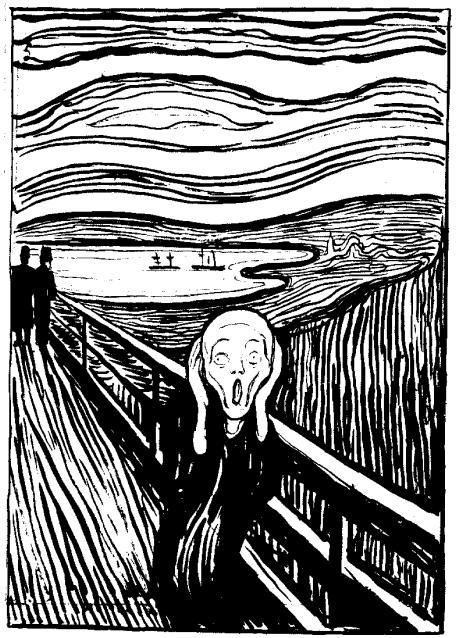

Munch –The scream

Status of Various Parts of IEEE 1451

1451.0 – Basic data/TEDS format	**Done (2007)**
1451.1 – NCAP/Computer Interface	Done (1999)*
1451.2 – RS-232	Done (1997)*
1451.3 – Wired Multi-drop	Done (2002)*
1451.4 – TEDS Only	Done (2005)
1451.5 – Wireless (WiFi, Zigbee, etc)	Done (2007)
1451.7 – RFID	Being ratified

Described in next paper

* Needs revision

IEEE 1451.0 (Dot 0) TEDS Format

- Required TEDS [Memory block with defined format]
  - MetaTEDS
  - Channel TEDS
  - Calibration TEDS (unless SI units)
  - Xdr-name TEDS
  - Phy TEDS
  - Also optional TEDS

- Data Transmission [specific octet format]
  - TEDS/Status requests
  - Triggering and configuration
  - Sensor read commands and data return
  - Actuator write commands and data sending

TEDS Format

- General format for each TEDS section (except Dot 4):

Field	Description	Data Type	Number of Bytes
-------	TEDS Length	UInt32	4 bytes
1 to N	Data Block	Variable	Variable
-------	Checksum	Uint16	2 bytes

- Binary TEDS Tuple format for each data block:

  Type-Length-value (TLV)

  Example: 01 02 A3 04

  Field type is 1, Length is 2 bytes, field value is “A304” hex

- Field example: Meta-TEDS (TEDS # 1)

  13: Number of Implemented Transducer Channels (default=1)

Standard Transducer Units
(binary format)

SI Based Units

Base Quantity	Name	Unit Symbol
Length	meter	m
Mass	kilogram	kg
Time	second	s
Electric current	ampere	A
Thermodynamic temperature	Kelvin	K
Amount of substance	mole	mol
Luminous intensity	candela	cd

Field	Description	Data Type	Number of octets
1	Physical units interpretation	UInt8	1
2	(2 * <exponent of radians>) + 128	UInt8	1
3	(2 * <exponent of steradians>) + 128	UInt8	1
4	(2 * <exponent of meters>) + 128	UInt8	1
5	(2 * <exponent of kilograms>) + 128	UInt8	1
6	(2 * <exponent of seconds>) + 128	UInt8	1
7	(2 * <exponent of amperes>) + 128	UInt8	1
8	(2 * <exponent of kelvins>) + 128	UInt8	1
9	(2 * <exponent of moles>) + 128	UInt8	1
10	(2 * <exponent of candelas>) + 128	UInt8	1

Dot 0 Command/Response Header

Byte Number	Description
1	Destination Transducer Channel Number (Most significant byte)
2	Destination Transducer Channel Number (Least significant byte)
3	Command Class
4	Command Function
5	Length (Most significant byte)
6	Length (Least significant byte)
7-N	Command dependent bytes

NCAP Command Message Structure

Byte Number	Description
1	Success/Fail Flag
2	Length (Most significant byte)
3	Length (Least significant byte)
4-N	Reply dependent bytes

TIM Reply Message Structure

TEDS Compiler (Meta-TEDS section)

Part of Ph. D. thesis
Wai Liu
(Univ. at Buffalo)

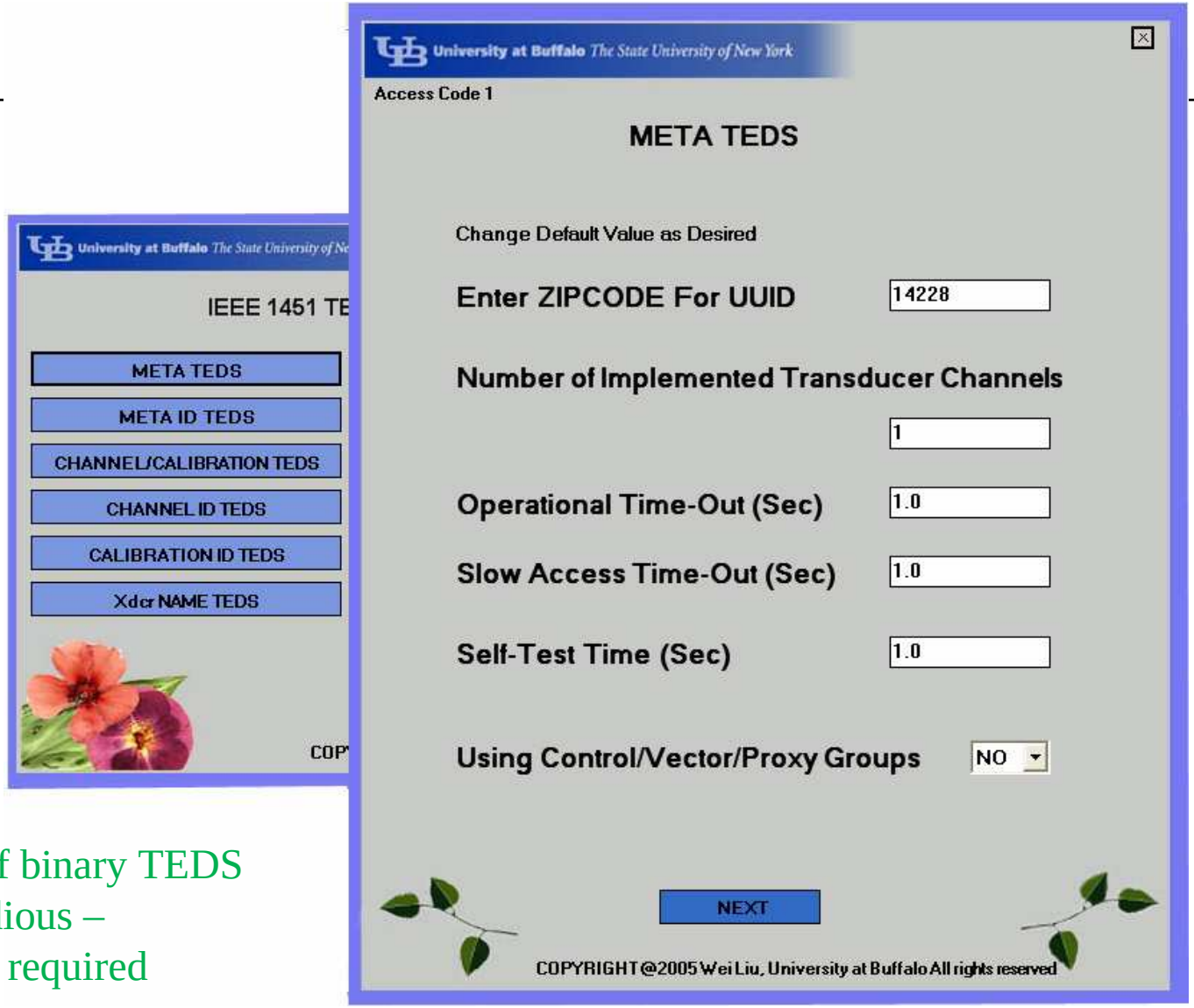

Preparation of binary TEDS
by hand is tedious –
A compiler is required

Channel/Calibration TEDS (for linear sensors)

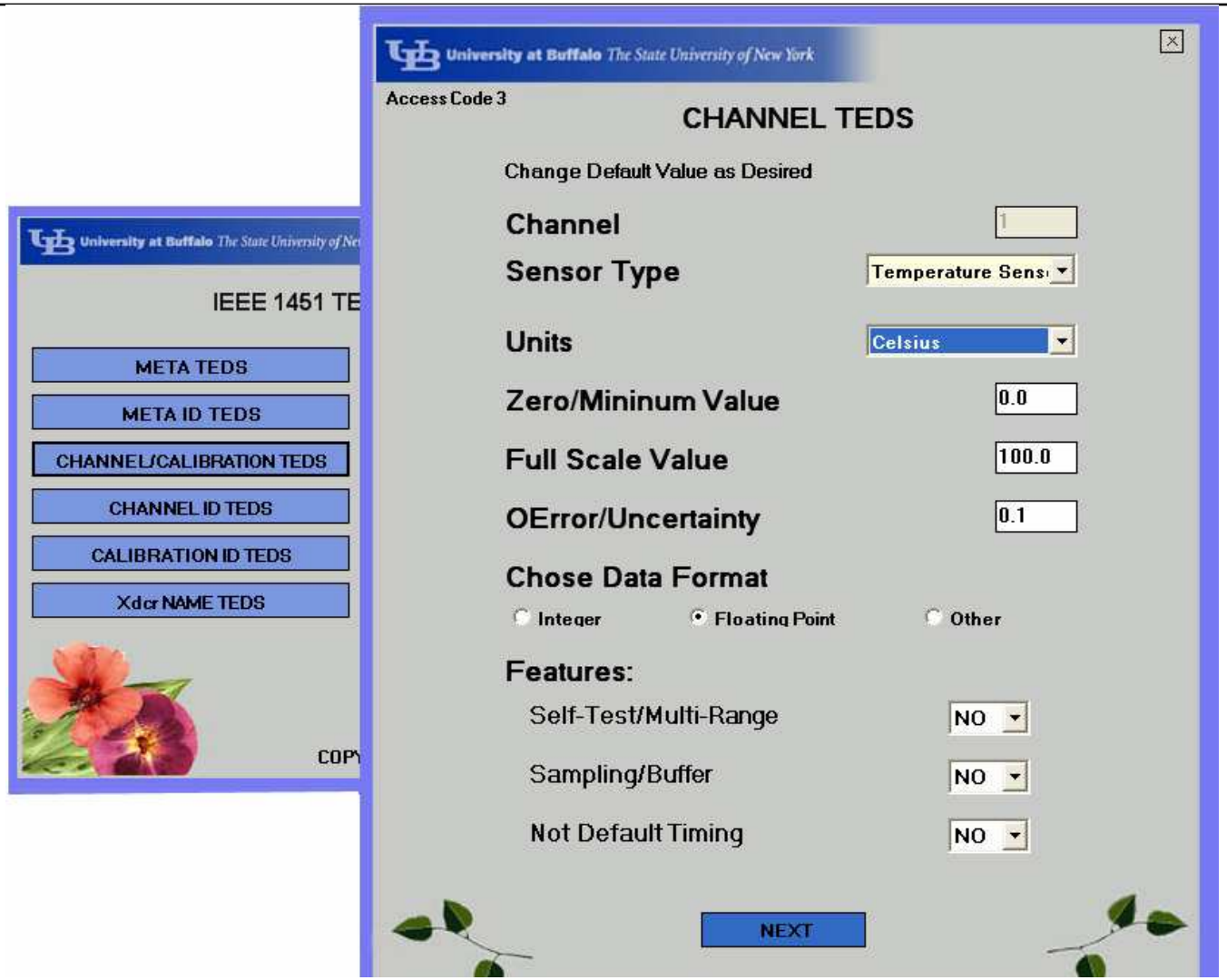

TEDS Reader

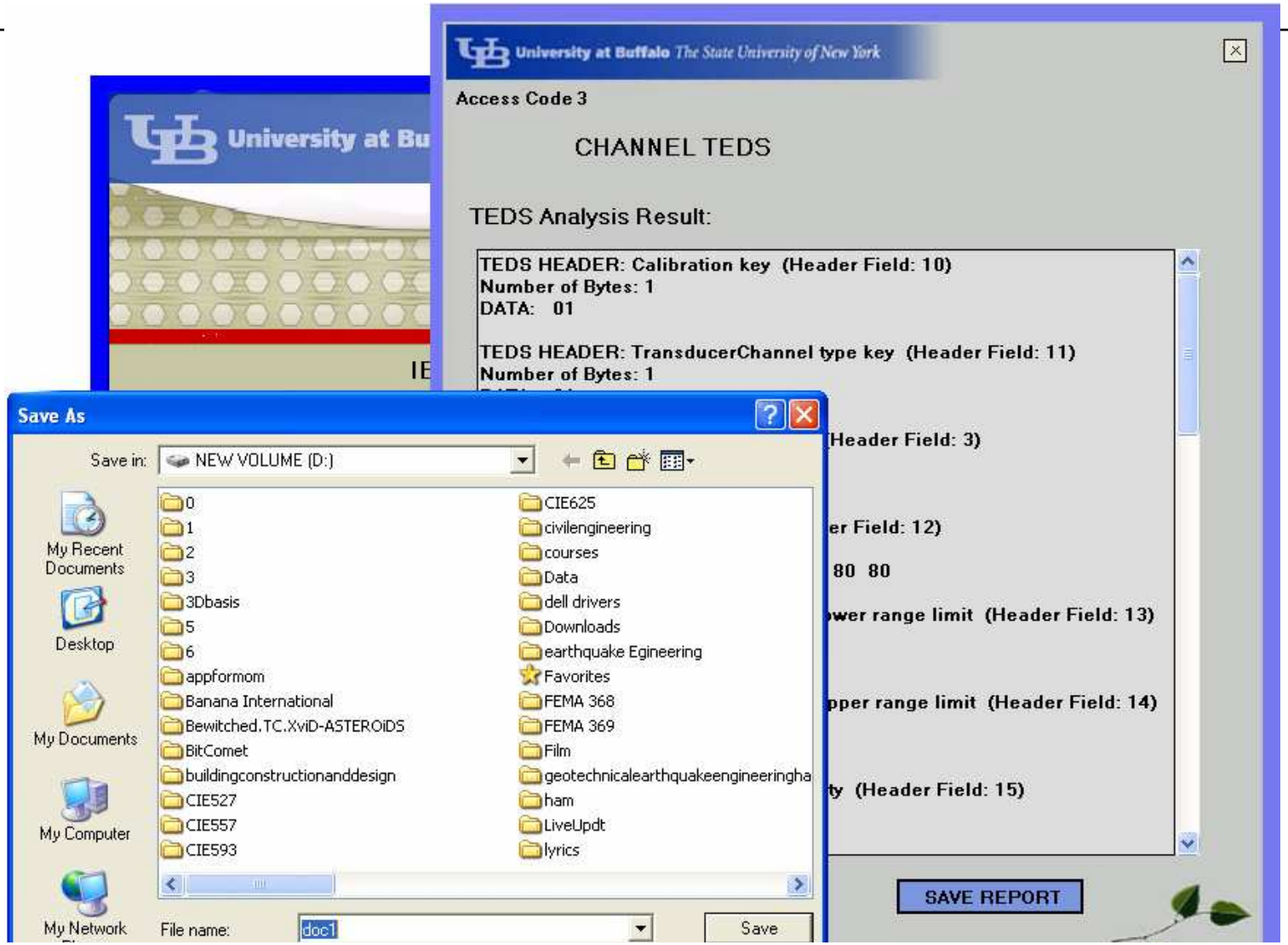
University at Buffalo The State University of New York
Access Code 3
CHANNEL TEDS
TEDS Analysis Result:
TEDS HEADER: Calibration key (Header Field: 10)
Number of Bytes: 1
DATA: 01
TEDS HEADER: TransducerChannel type key (Header Field: 11)
Number of Bytes: 1
Header Field: 3)
er Field: 12)
80 80
wer range limit (Header Field: 13)
pper range limit (Header Field: 14)
ty (Header Field: 15)
SAVE REPORT
Save As
Save in: NEW VOLUME (D:)
My Recent Documents
Desktop
My Documents
My Computer
My Network
0
1
2
3
3Dbasis
5
6
appformom
Banana International
Bewitched.TC.XviD-ASTEROiDS
BitComet
buildingconstructionanddesign
CIE527
CIE557
CIE593
CIE625
civilengineering
courses
Data
dell drivers
Downloads
earthquake Egineering
Favorites
FEMA 368
FEMA 369
Film
geotechnicalearthquakeengineeringha
ham
LiveUpdt
lyrics
File name: doc1
Save

Network side (NCAP) options
(wired)

- Internet/Ethernet
- PC Readout
- Industrial network

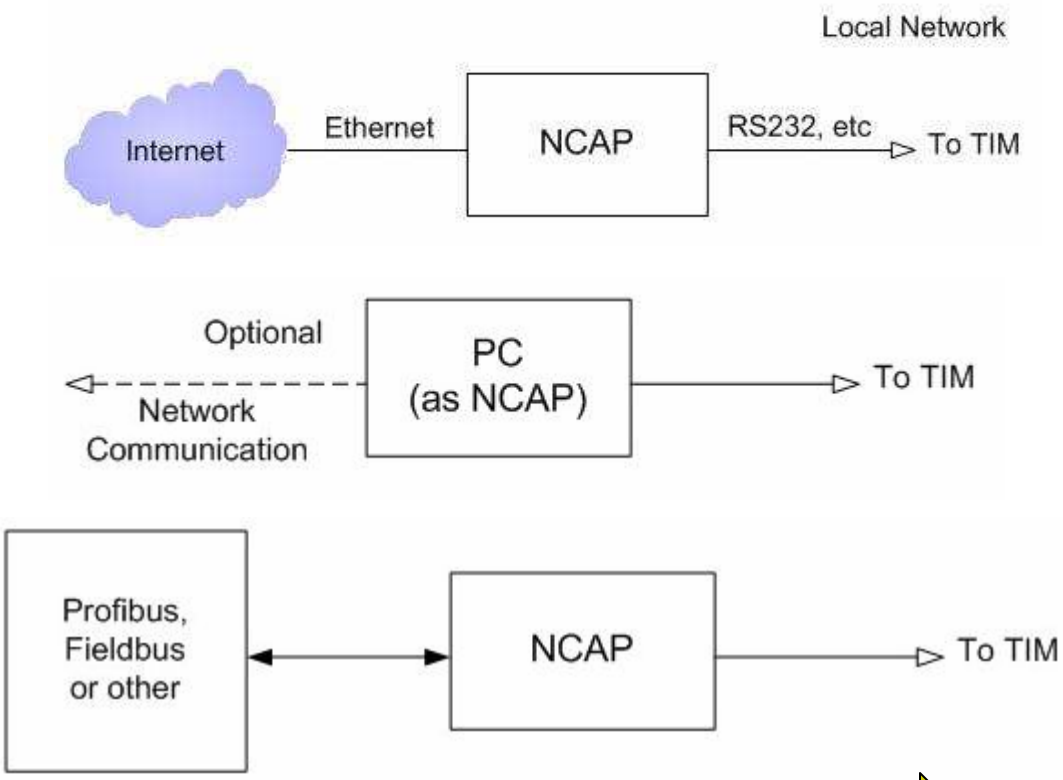

All use Dot 0 protocol

Data Readout Examples
(HTTP via Internet)

- Sensor data converted to ASCII for display

- TEDS data is displayed in hexadecimal form

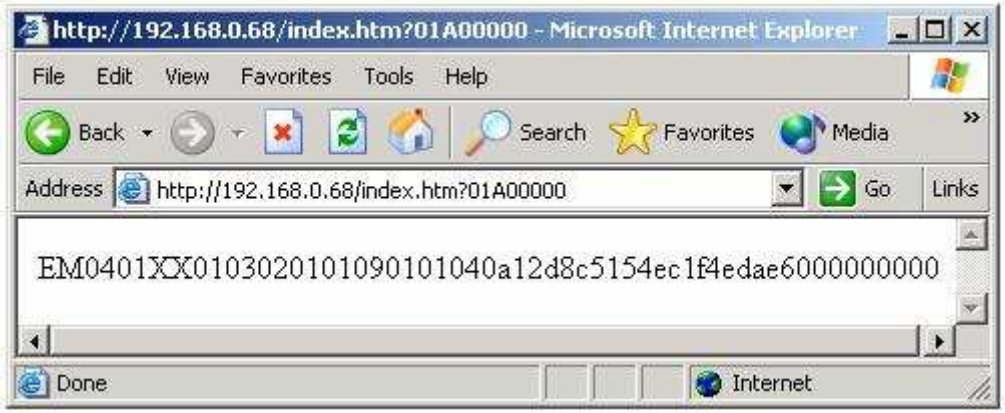

Prototype TIM and NCAP

- NCAP interfaces to Internet via Ethernet

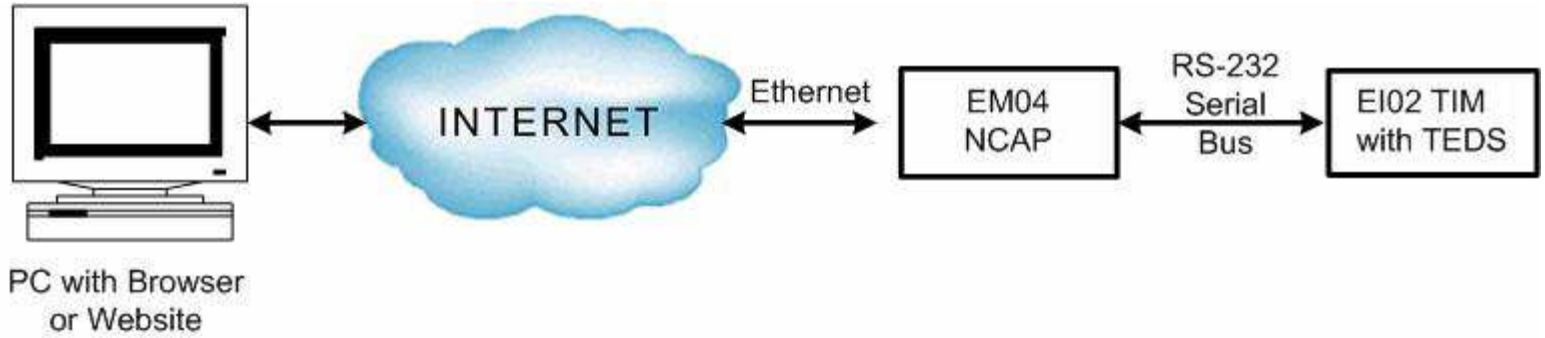

Serial Bus Format
and Relation to other Networks

- Tester uses RS232 serial bus only but…
- Interfaces to other physical devices (USB, RS485, Bluetooth, Zigbee, ….) available.
- TEDS retrieval is one feature
- Sensor data read (protocol check) for each channel:

  Idle mode – full scale value of sensor reading

  (Checked against TEDS, error flag is not correct)

  Operating mode – actual sensor reading

  (Must be within sensor range)

Wireless Sensors

for short-range, unlicensed band

Classes of wireless sensors

A. Significant power available

line-powered or laptop size battery

B. Medium low power

re-chargeable batteries or shorter life applications

C. Very low power

Long life operation (years)

Wireless (Dot 5) Options

- IEEE 1451.5 protocols are based on existing wireless protocols used for sensor networking (mostly additions to the OSI Application Layer)
- NCAP (gateway) Network (e.g. Internet) format uses Dot 0
- Current options are:
  - WiFi (IEEE 802.11)
  - Bluetooth (IEEE 802.15.1)
  - Zigbee (IEEE 802.15.4)
  - 6LoWPAN (IEEE 802.15.4, IPv6)
- Named TIM or WTIM (Wireless Transducer Interface Module)
- Many options, including TIM to TIM com. via NCAP

Example –
Wireless Connection

- Wireless modules with RS232 I/O when connected to Dot 2 TIMS are similar to IEEE 1451.5 TIMs (wireless version of IEEE 1451).
- Data format and TEDS are the same (both follow the Dot 0 standard)..

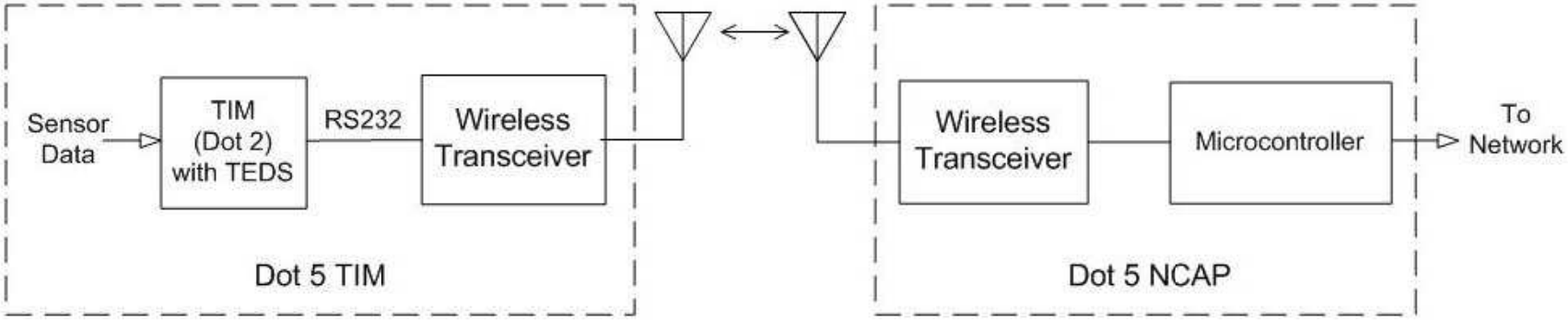

Dot 5 TIM built from a Dot 2 TIM and wireless transceiver

RFID with Sensors (Dot 7)

- Combines Radio Frequency IDentification with sensors
- Uses standard (ISO/IEC) RFID communication/format with additional sensor memory section
- Sensor format is based in IEEE 1451 protocol
- Typical application is tracking and monitoring perishable shipments (temperature, shock/vibration)

Harmonization of IEEE 1451 with Internet sensor standards

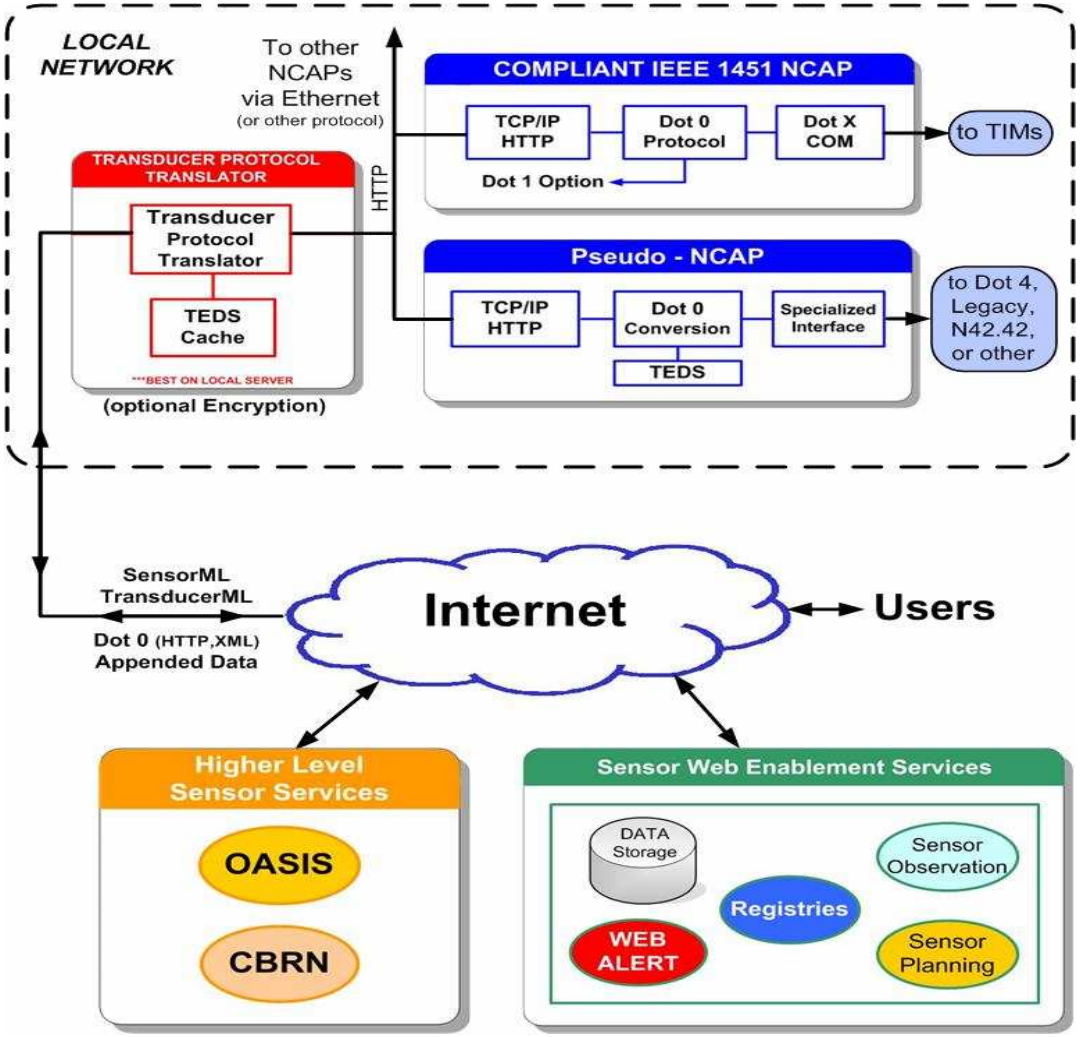

Part B

- Applications of the IEEE 1451 smart transducer standard to HVAC

Organization of HVAC Transducers

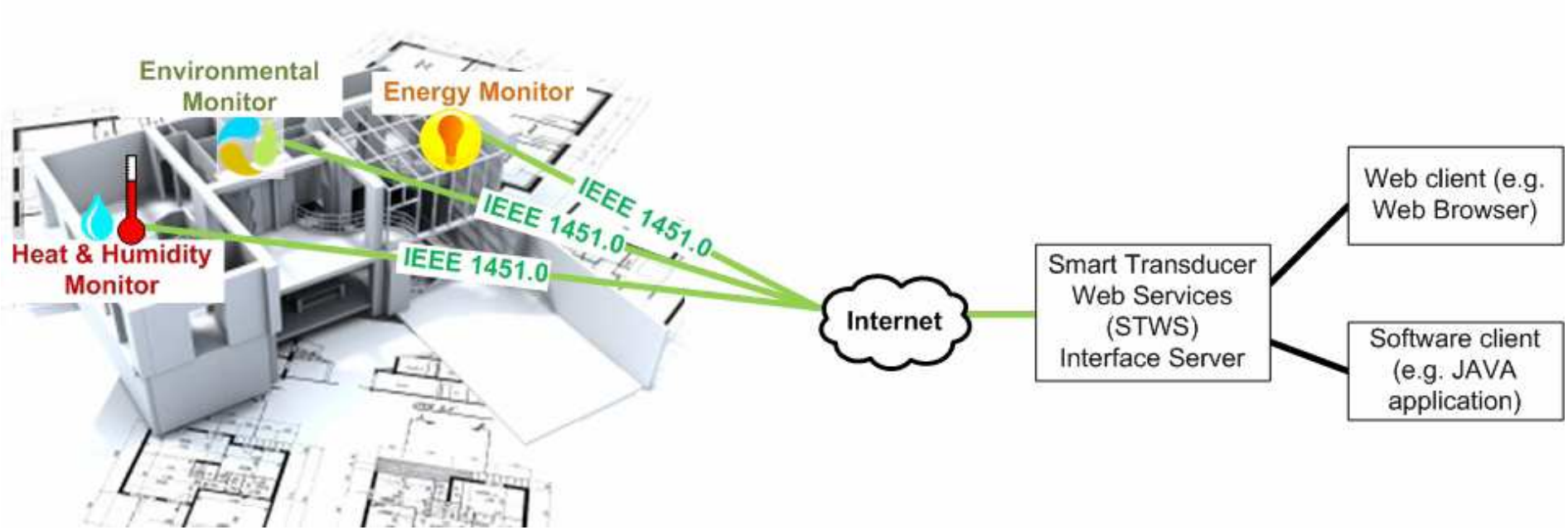

HVAC sensor with Internet Address

- Uses Ethernet as the Network
- Microcontroller has TCP/IP (mini-website) as protocol
- Data (temp/hum/light) can be read anywhere on Internet
- Polling/logging/display by remote websites
- This version is a smart sensor but does **not** have a IEEE 1451 standard interface

Websensor

Data readout
(typical of digital sensor displays)

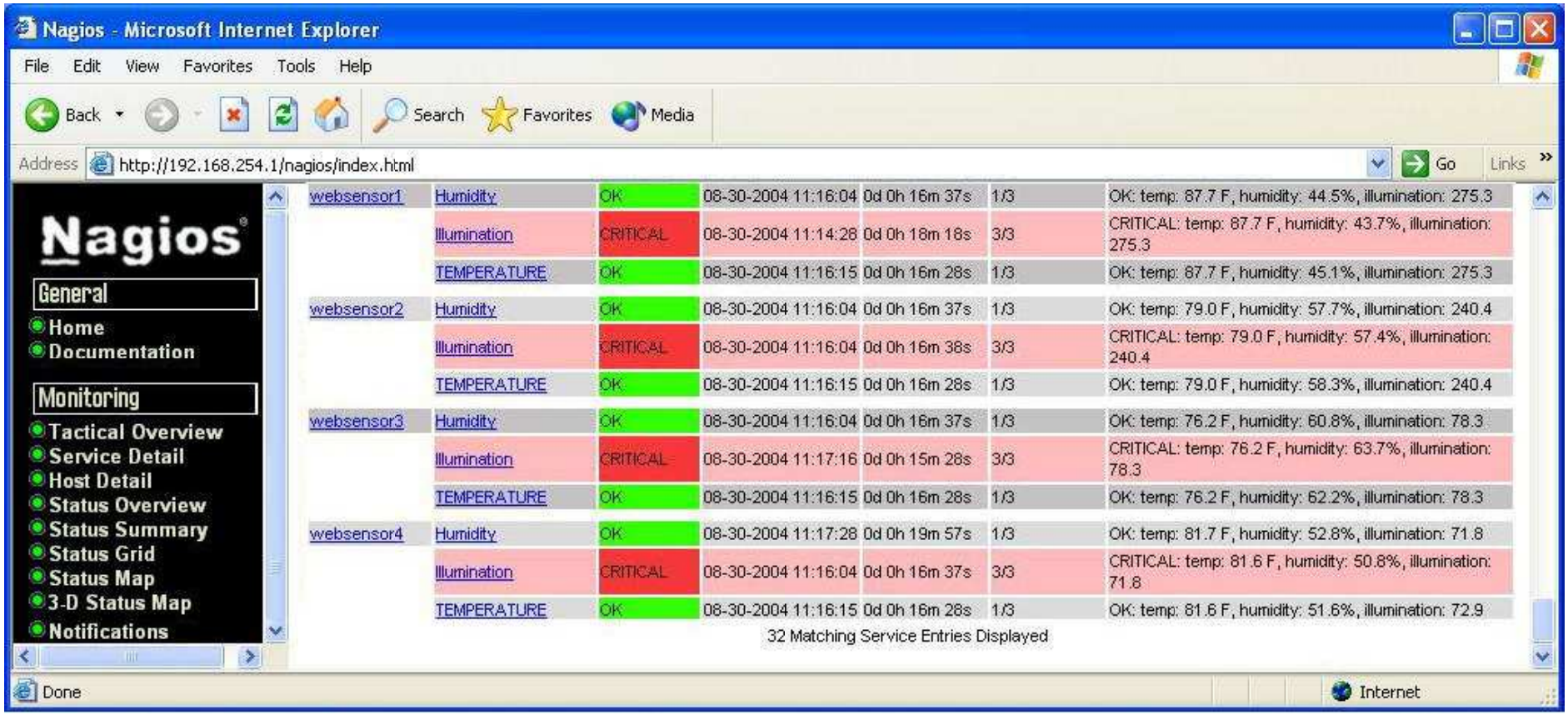

websensor1	Humidity	OK	08-30-2004 11:16:04	0d 0h 16m 37s	1/3	OK: temp: 87.7 F, humidity: 44.5%, illumination: 275.3
	Illumination	CRITICAL	08-30-2004 11:14:28	0d 0h 18m 18s	3/3	CRITICAL: temp: 87.7 F, humidity: 43.7%, illumination: 275.3
	TEMPERATURE	OK	08-30-2004 11:16:15	0d 0h 16m 28s	1/3	OK: temp: 87.7 F, humidity: 45.1%, illumination: 275.3
websensor2	Humidity	OK	08-30-2004 11:16:04	0d 0h 16m 37s	1/3	OK: temp: 79.0 F, humidity: 57.7%, illumination: 240.4
	Illumination	CRITICAL	08-30-2004 11:16:04	0d 0h 16m 38s	3/3	CRITICAL: temp: 79.0 F, humidity: 57.4%, illumination: 240.4
	TEMPERATURE	OK	08-30-2004 11:16:15	0d 0h 16m 28s	1/3	OK: temp: 79.0 F, humidity: 58.3%, illumination: 240.4
websensor3	Humidity	OK	08-30-2004 11:16:04	0d 0h 16m 37s	1/3	OK: temp: 76.2 F, humidity: 60.8%, illumination: 78.3
	Illumination	CRITICAL	08-30-2004 11:17:16	0d 0h 15m 28s	3/3	CRITICAL: temp: 76.2 F, humidity: 63.7%, illumination: 78.3
	TEMPERATURE	OK	08-30-2004 11:16:15	0d 0h 16m 28s	1/3	OK: temp: 76.2 F, humidity: 62.2%, illumination: 78.3
websensor4	Humidity	OK	08-30-2004 11:17:28	0d 0h 19m 57s	1/3	OK: temp: 81.7 F, humidity: 52.8%, illumination: 71.8
	Illumination	CRITICAL	08-30-2004 11:16:04	0d 0h 16m 37s	3/3	CRITICAL: temp: 81.6 F, humidity: 50.8%, illumination: 71.8
	TEMPERATURE	OK	08-30-2004 11:16:15	0d 0h 16m 28s	1/3	OK: temp: 81.6 F, humidity: 51.6%, illumination: 72.9

Uses standard web browser (HTTP)

Conversion to IEEE 1451.0 (Dot 0) Format

- Start with networked (Ethernet compatible) smart sensor -Combined TIM and NCAP
- Add TEDS
- Add HTTP Dot 0 commands interpretation
- Respond with data in Dot 0 format using HTTP
- Requires website which understands and displays Dot 0 format data
- Implement plug and play

TEDS (Dot 0) for HVAC Smart Sensor

- Meta-TEDS (for ID and overall configuration)
- Chan 1 (time) TEDS -- optional, but recommended
- Chan 2 (temperature) TEDS (+ calib TEDS)
- Chan 3 (humidity) TEDS (+ calib TEDS)
- Chan 2 (illumination) TEDS (+ calib TEDS)
- XdrcName TEDS – Name (e.g. furnace room) given by user
- GeoLoc (Location) TEDS -- optional

Dot 0 Commands for HVAC Sensor -- TEDS Related

- Tim Discovery --to see what is available
- Transducer discovery – to see what is available
- Read TEDS (read individually)
- Read Name TEDS
- Read Location TEDS (if available)
- Read Data (each channel individually or as a group
- Other commands available but not implemented here

STWS vs HTTP direct

- Smart Transducer Web Services translates Dot 0 commands and data via HTTP into network friendly SOAP (Simple Object Access Protocol).
- STWS was developed at NIST (sponsor of 1451 protocol) – it is a version of the Dot 1 protocol which implements plug and play

Contact: designer@eesensors.com

STWS Website

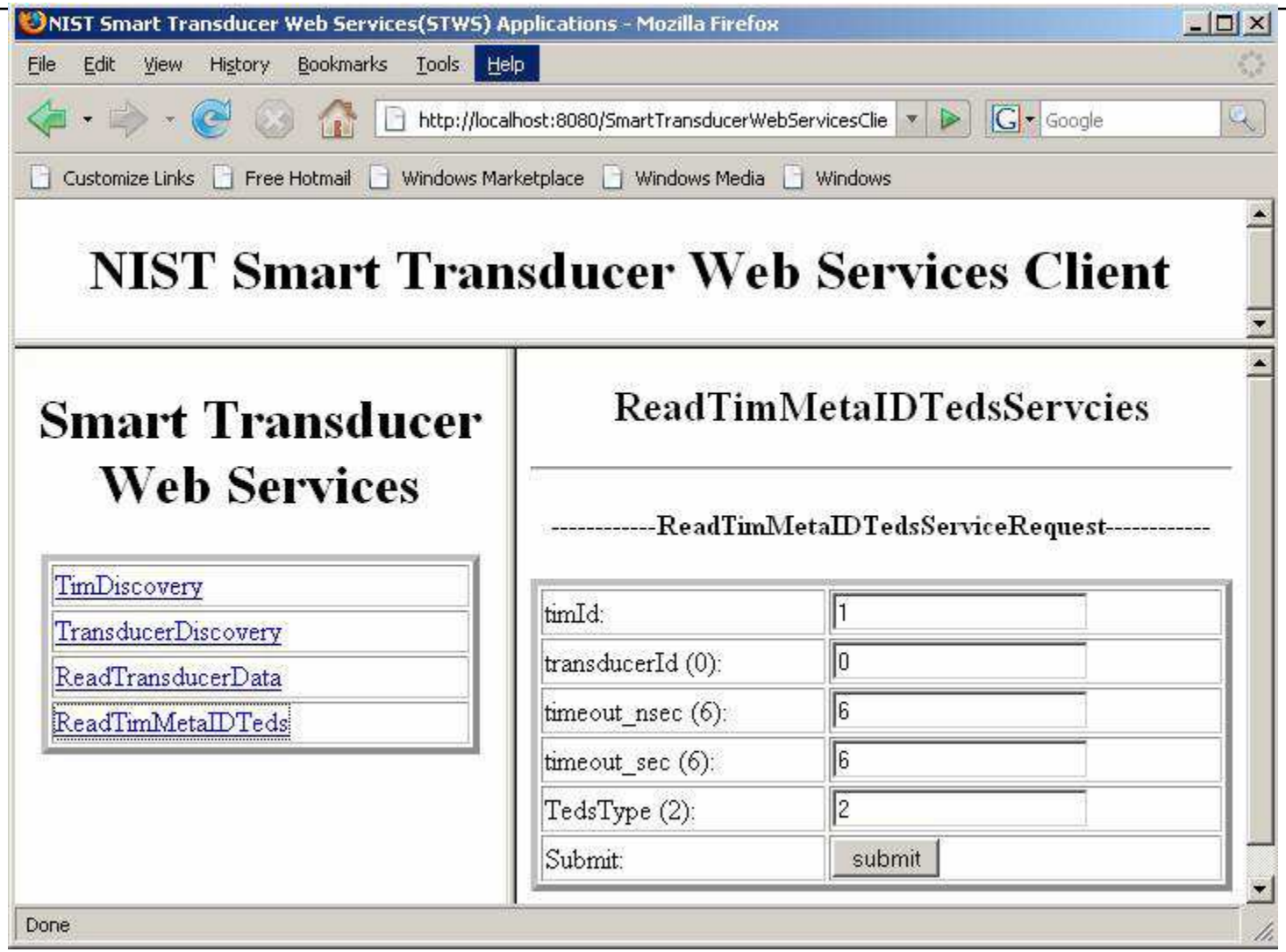

Dot 0 Commands for HVAC Sensor -- TEDS Related

- TIM Discovery (to see which TIMs are available):
  http://192.168.254.99:80/1451/TIMDiscovery?responseFormat=text
  Response: 0,1
- TransducerDiscovery
  http://192.168.254.99:80/1451/TransducerDiscovery?timId=1&responseFormat=text
  Returns: 0,1,1,2,3,TEMP,HUM,ILLUM
- Read TEDS (read individually)
- other

Website Graphical Display for Dot 0 Data

- ReadTransducerData
  http://192.168.254.99:80/1451/ReadData?timId=1&channelId=1&sec=6&nsec=6&samplingMode=5&responseFormat=text
  Returns: 0,1,1,TEMP,25.99,C
- ReadMetaIDTEDS
  http://192.168.254.99:80/1451/ReadTeds?timId=1&channelId=0&sec=1&nsec=1&tedsType=2&responseFormat=text
  Returns: 0,1,0,2,24:75:32:10:FA:CC, Esensors Inc, Websensor

Graphical Readout of HVAC Monitor

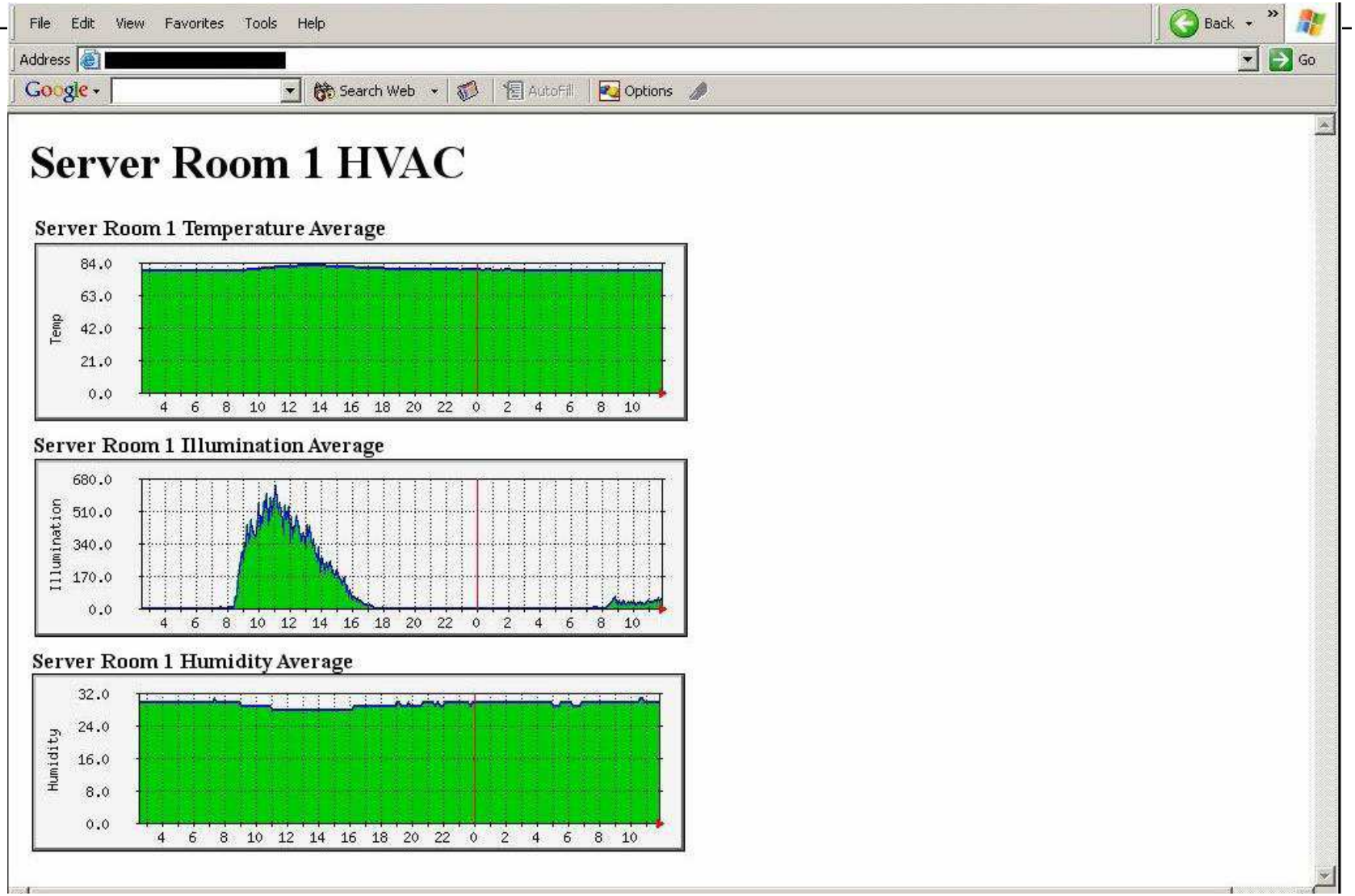

Another Readout Example

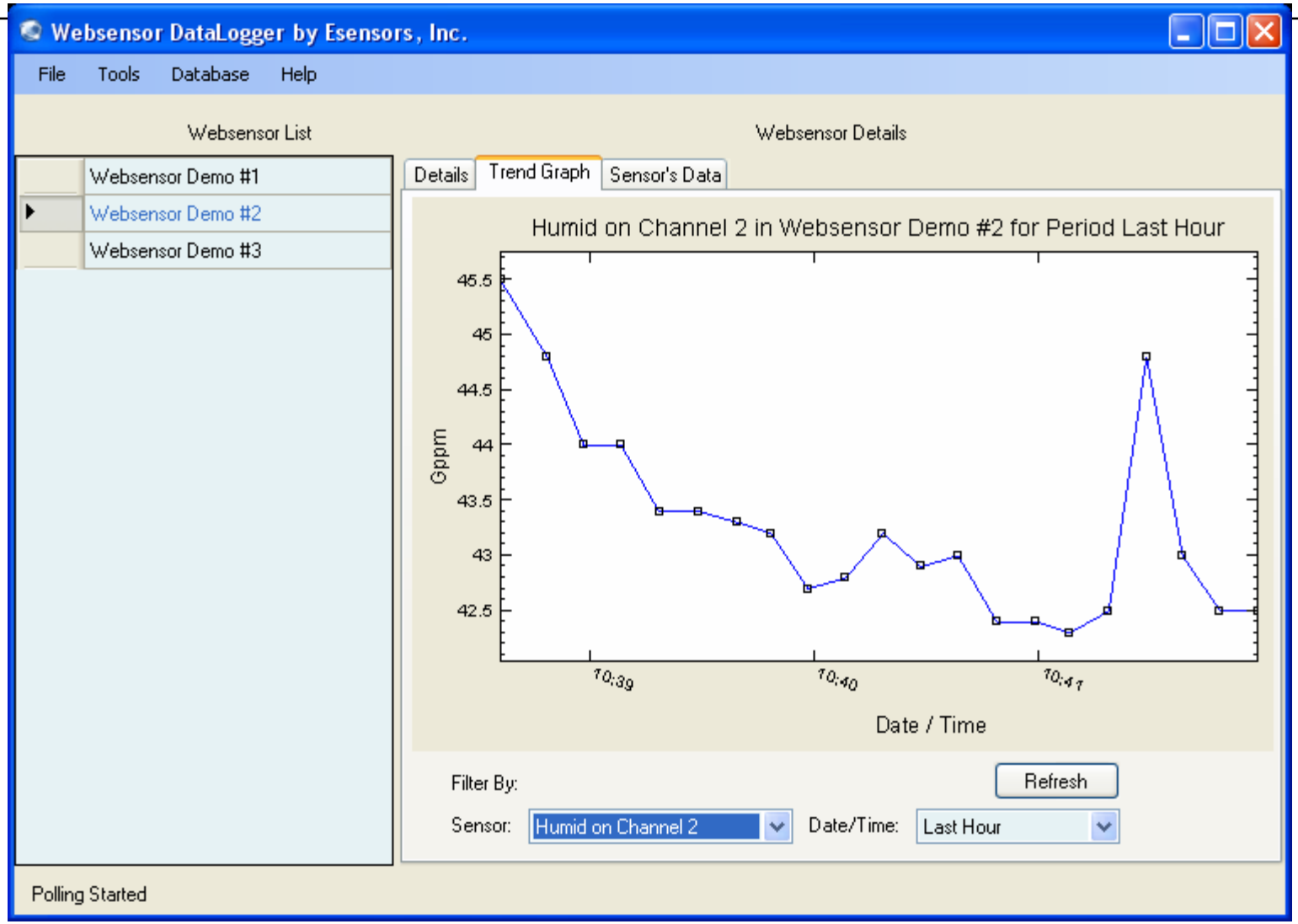

Applications for HVAC

- Monitor environmental conditions
  - Standard: temperature, humidity, illumination
  - Gases: CO2, CO, VOC
- Monitor electrical usage and status
- Control motors, dampers, valves
- Local and Internet via standard formats

Summary

- Described the IEEE 1451 smart transducer standard
- Discussed applications of the standard to HVAC monitoring

Contact: designer@eesensors.com

End

- Backup Slides Follow

www.eesensors.com

Harmonization Meeting Summary
(Held at NIST four times a year)

- 25 attendees, mostly government
- DOD, DHS, DJ, DS represented (also NASA subcontractor)
- All working under directives to implement standards
- DHS new directive requires new sensors to use existing open standards if available (not proprietary or invent new)
- DOD joint task group working on standards and expects to support test bed. Possible FY'10 requirement.
- Several test beds involving IEEE 1451 started (Esensors has some part in all).

IEEE 1451 as a Universal Digital Sensor Base Format

- Specialized networks can handle only a limited number of sensor types or uses non-compact format
  - 1451 is much superior at the sensor end
- Most applications require individualized displays or graphical user interfaces – 1451 is a fixed format and poorly suited at the user end
- Network oriented applications prefer XML or similar formats which are convenient, but are too verbose at the sensor end
- 1451 at the sensor end (Sensor Fusion level 0) combined with translators is the best solution.

Future Prospects for IEEE 1451

- There has been little interest in previous parts of IEEE 1451 (Dots 2, 1 & 3), except for Dot 4 in certain areas.
- The basic Dot 0 (and Dot 5) are more carefully composed and thus likely to be accepted.
- The compiler may answer the complexity issue but still implementation of any full-featured standard will be difficult.
- The US government may mandate a sensor data standard and the NIST-supported IEEE 1451 is the most recognized candidate.
- The sensor industry, especially the wireless network sector, must recognize the business advantages of a single sensor data standard.

Wireless sensors – significant power available

- Line-powered or laptop sized battery
- Uses transceiver
- Popular choice: WiFi (IEEE 802.11b), 2.4 GHz

  Components widely available (moderate cost)

  Good bandwidth
- Variation of TCP/IP protocol, mostly non-standard

Wireless sensors – medium low power

- Re-chargeable battery
- Uses transceiver
- Popular choices: Bluetooth (IEEE 802.15.1)

  Low cost components (production scale)

  Hard to interface to sensors on prototype scale

  Moderate bandwidth
- Zigbee (IEEE 802.11.5)

  Low bandwidth

  Intermittent communication (sleep mode)

  Star or Mesh

Wireless sensors – Very low power

- Coin size battery, non-rechargeable, lifetime of years
- Transmit only
- Popular choice: TI/Chipcon (433 MHz and 2.4 GHz)

  RF modules and microcontrollers available

  Low bandwidth

  Intermittent transmission (sleep mode)

Wireless Sensor Example
(low cost, long life, short messages)

- WS01 wireless temperature (and other) sensors
- 433 MHz FSK – range 10 to 100 meters, transmit only
- SNAP data protocol (header, data, crc)—8 to 12 bytes
- Dot 4 TEDS send periodically

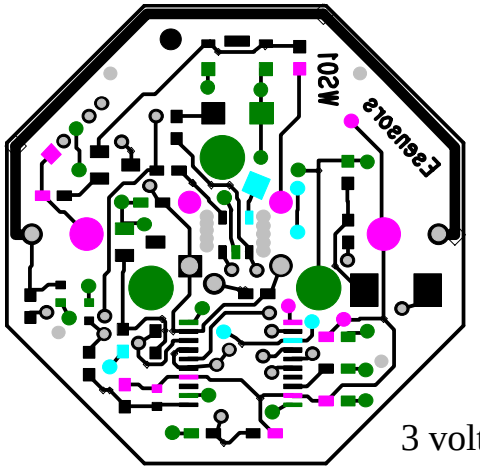

3 volt coin battery
(back)

Printed Circuit Board (back)

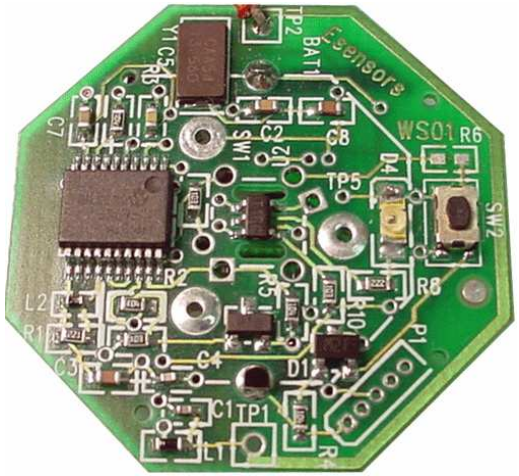

Photo (front)

Zigbee Mesh Network System

- One of many sensor networks available.

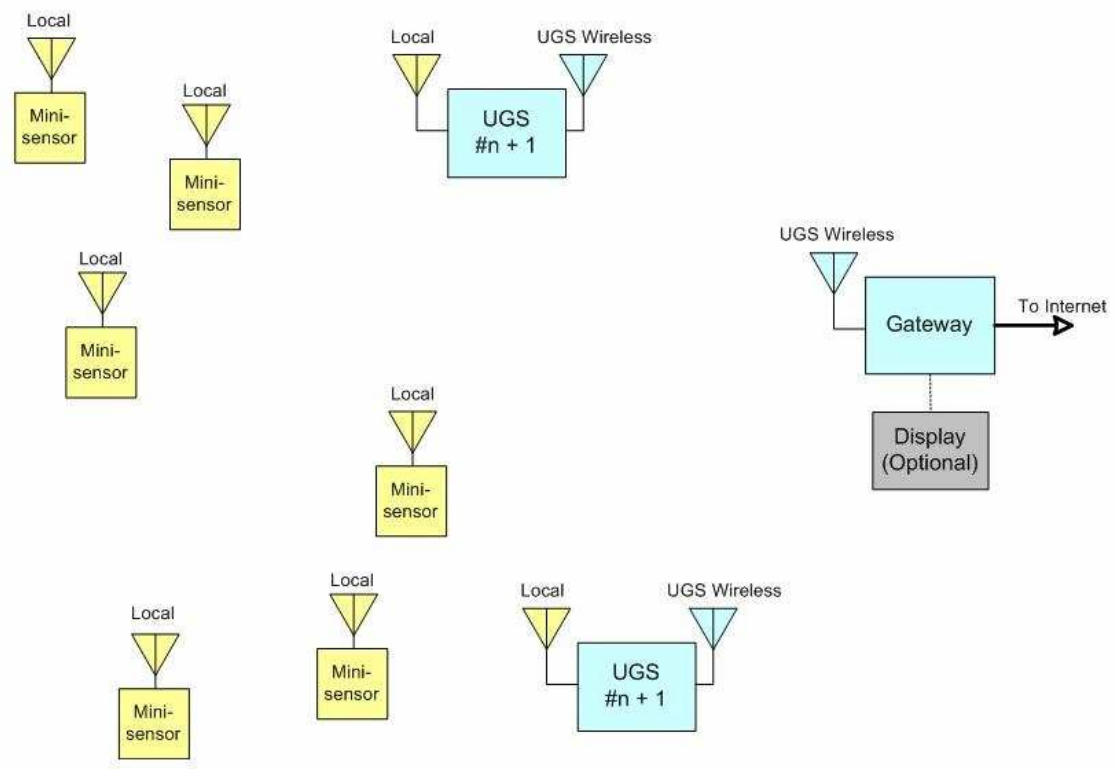

TEDS Compiler

- Part of Ph. D. thesis of Wai Liu (Univ. at Buffalo)

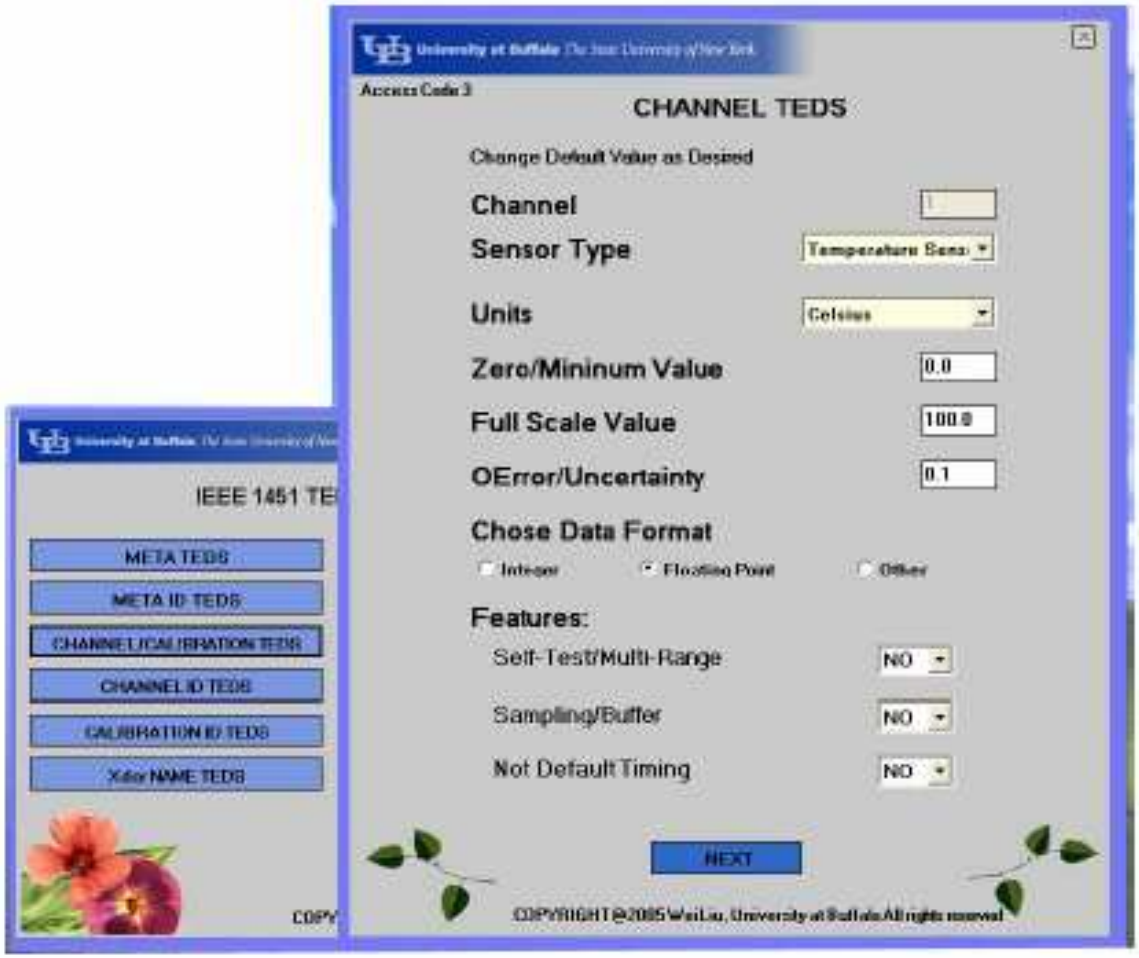

TIM Tester – Data retrieval

IEEE 451 TIM Compliance Tester

- TIM (Transducer Interface Module) is most complex and done by sensor design engineers
  - (TIM tester can be used by the few NCAP designers)
- Tester verifies compliance of a TIM to IEEE 1451.0 (Dot 0) protocol
- Focus is on TEDS checking and data transfer format
- Physical device compliance not checked (part of other standards, e.g. RS485, Bluetooth)
- Tester uses serial bus (RS232)
- Testing may be done by Internet

Transducer Electronic Data Sheet
Dot 4 TEDS -- TEDS only

- UUID (Universal **Unique** Identifier)

  Supplied by EEPROM (DS2433) manufacturer (6 bytes)
- Basic TEDS (8 bytes)
  - Model Number (15 bits)
  - Version Letter (5 bits, A-Z)
  - Version Number (6 bits)
  - Manufacturer ID (14 bits)
  - Serial Number (6 bits)
- IEEE Template or Manufacturer's TEDS

  Sensor type and calibration parameters (32 bytes)

Conversion to Dot 0 TEDS possible (but not unique)

Dot 4

Alternative Tester for Dot 4 TEDS

IEEE 1451.4 (only) does not use the Dot 0 format TEDS. This is a small, TEDS-only version (no digital data format is specified by the standard).

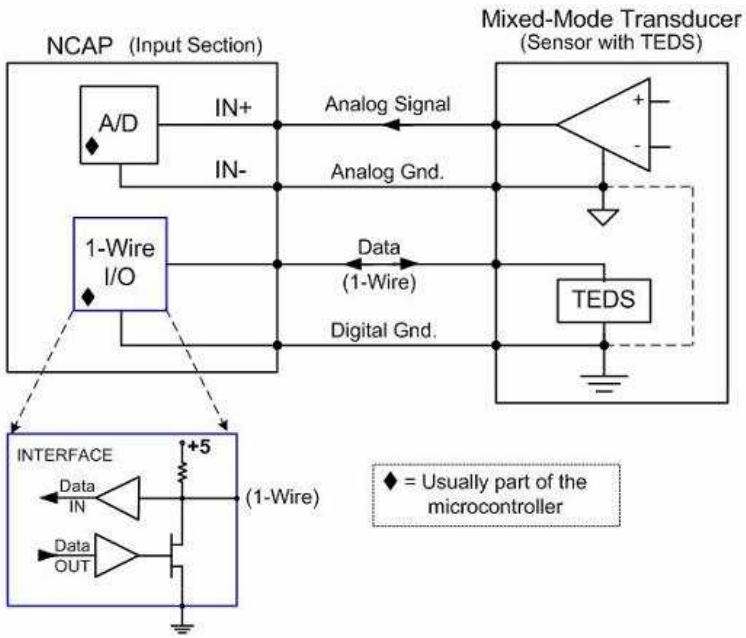

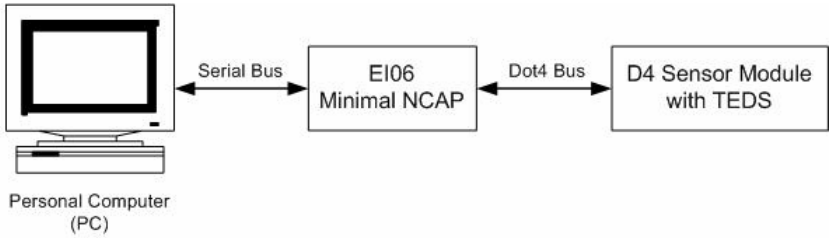

Dot 4 TEDS Writer and Reader

(PC Screens)

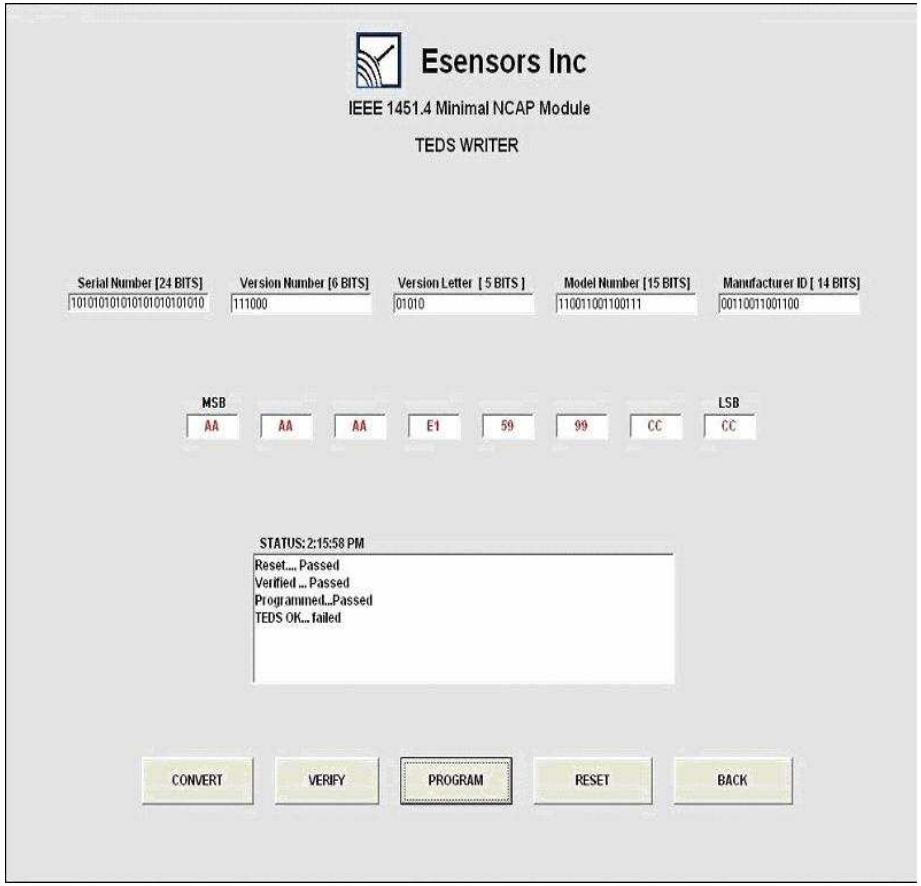

Writer

Reader